FORD TRACTOR

with

Ferguson System

TRACTOR PARTS PRICE LIST

MAY 15, 1941

Distributed Nationally by

FERGUSON-SHERMAN MANUFACTURING CORPORATION

DEARBORN, MICHIGAN

FORD TRACTOR

with

Ferguson System

TRACTOR PARTS PRICE LIST

EFFECTIVE MAY 15, 1941

Copyright 1941
Ferguson-Sherman Mfg. Corp.
Dearborn, Michigan
All rights reserved

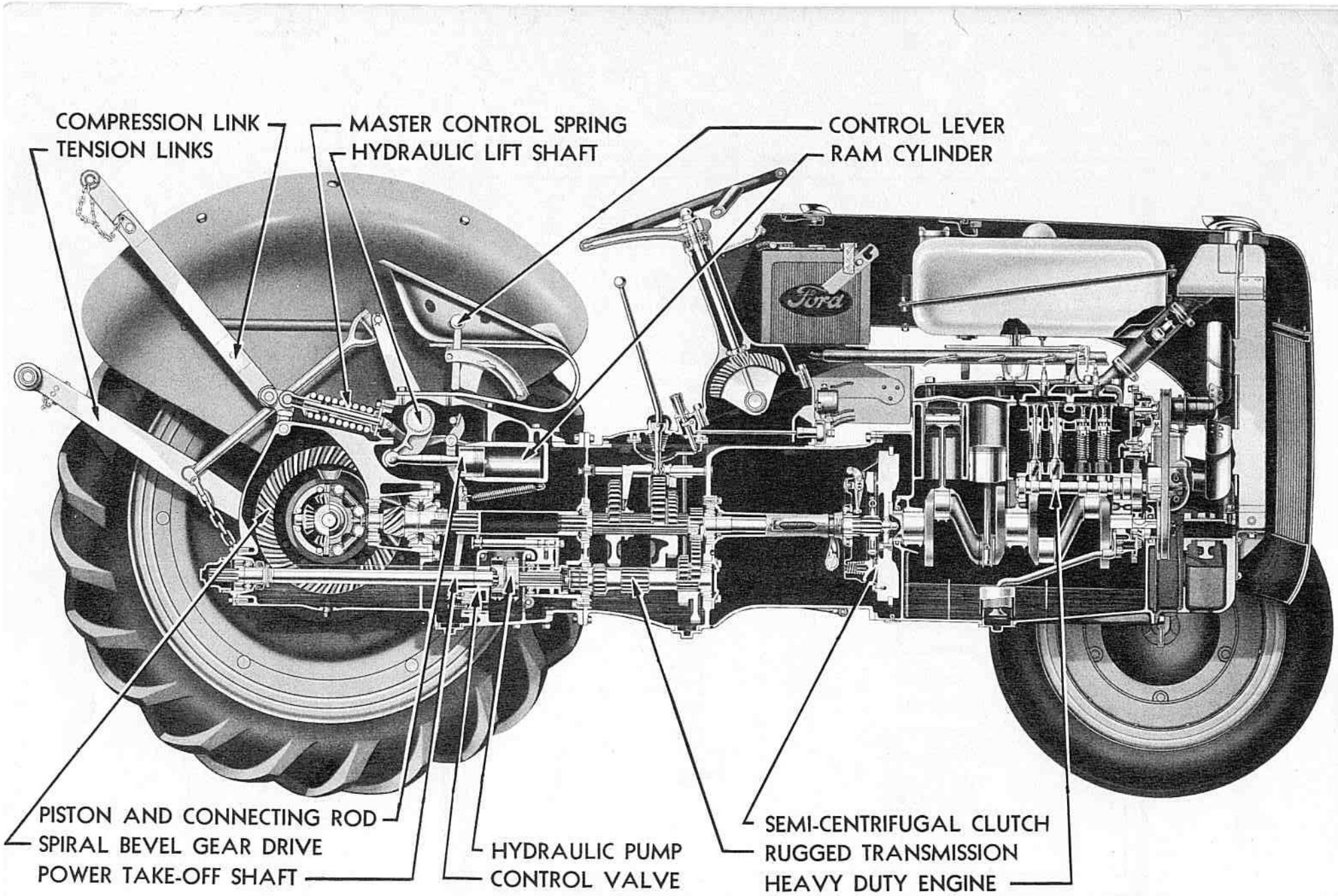
COMPRESSION LINK
TENSION LINKS
MASTER CONTROL SPRING
HYDRAULIC LIFT SHAFT
CONTROL LEVER
RAM CYLINDER
PISTON AND CONNECTING ROD
SPIRAL BEVEL GEAR DRIVE
POWER TAKE-OFF SHAFT
HYDRAULIC PUMP
CONTROL VALVE
SEMI-CENTRIFUGAL CLUTCH
RUGGED TRANSMISSION
HEAVY DUTY ENGINE

INDEX

	Page
ACCESSORIES	40
AIR CLEANER	31-32
AMMETER	35
AXLE - FRONT	14-16
AXLE - REAR	17-20
BATTERY	35
BRAKES	13
CARBURETOR	30-31
DISTRIBUTOR AND COIL	36-37
DRAWBAR	20
ENGINE	21-23
FENDER	38
FUEL SYSTEM	30
GENERATOR	32-35
GOVERNOR	39
HEAD LAMP	40
HOOD ASSEMBLY	38
HYDRAULIC LIFT	5-9
HYDRAULIC PUMP	9
MANIFOLD	30
MUFFLER ASSEMBLY	20
OIL FILTER	39-40
POWER TAKE-OFF PULLEY (ATTACHMENT)	9-11
RADIATOR AND GRILLE	27
SEAT - DRIVERS	5
STANDARD PARTS	41-44
STARTER AND DRIVE	35-36
STEERING GEAR	16-17
SYMBOLS	45-46
THROTTLE CONTROLS	32
TOOL BOX AND TOOLS	39
TRANSMISSION	23-27
WATER PUMP	27-30
WHEELS AND WHEEL HUBS	11-12
WIRING	37

INSTRUCTIONS FOR ORDERING PARTS

1. Always give tractor number when requested in foot notes. The number is located on left side of motor block.
2. Always order by part number and name.
3. Part orders should be separate and not included with letters pertaining to other subjects.
4. Specify how shipments are to be made—Freight, Parcel Post, or Express.
5. Order parts through your local distributor.

Prices subject to change without notice

Copyright 1941

Part No.	Price	Part Name	Unit	Remarks	Type	Year
		SEAT DRIVERS (See Illustration on Page 18)				
9N-400-A	$ 2.45	Seat Assy. - Drivers (Steel)	1		9N	39-41
350617-S7-8		Bolt (Carriage)-Seat to Seat Spring	1		9N	39-41
33792-S7-8		Nut (Hex)-Seat Spring Bolt	1		9N	39-41
351436-S7-8		Washer (Lock)-Seat to Seat Spring Bolt	1		9N	39-41
9N-404	2.40	Spring-Drivers Seat	1		9N	39-41
21441-S7-8		Bolt (Hex Head)-Spring Drivers Seat	2		9N	39-41
		HYDRAULIC LIFT				
9N-500	59.25	Hydraulic Lift Assembly	1		9N	39-41
9N-501	13.00	Cover - Hydraulic Lift	1		9N	39-41
21447-S7-8		Bolt (Hex Head)-Hydraulic Lift Cover to Center Housing	7		9N	39-41
21446-S7-8		Bolt (Hex Head)-Hydraulic Lift Cover to Center Housing	3		9N	39-41
21449-S7-8		Bolt (Hex Head)-Hydraulic Lift Cover to Center Housing	4		9N	39-41
9N-502	.15	Gasket - Hydraulic Lift Cover	1		9N	39-41
9N-503		Lynch Pin and Chain Assy. - Upper Link - Front	1	Obsolete Use 9N-590	9N	39-41
9N-504	1.60	Fork Assy. (Hand Control)-Hydraulic Lift.	1		9N	39-41
72017-S		Pin (Cotter)-Hydraulic Lift Hand Control Fork	2		9N	39-41
352592-S		Pin (Clevis)-Hydraulic Lift Hand Control Fork	2		9N	39-41
352547-S		Pin (Clevis)-Hydraulic Lift Hand Control Fork Assy. Center	2		9N	39-41
72003-S		Pin (Cotter)-Hydraulic Lift Hand Control Fork Assy. Center	2		9N	39-41
9N-505	.18	Upper Link Pin Chain Assy. - Front, left.	1		9N	39-41
9N-510-A	3.20	Cylinder - Hydraulic Lift	1	Before Tr. #47020	9N-	39-40
9N-510-B	3.20	Cylinder - Hydraulic Lift	1	After Tr. #47019	9N	39-41
20886-S7-8		Bolt (Hex Head)-Hydraulic Lift Cylinder to Cover	2		9N	39-41
20889-S7-8		Bolt (Hex Head)-Hydraulic Lift Cylinder to Cover	2		9N	39-41
33794-S7-8-18		Nut (Hex)-Cylinder to Hydraulic Lift Cover	4		9N	39-41
9N-511-A		Quadrant Assy. - Hydraulic Lift Control		Obsolete Serv. 515-A	9N	39-41
9N-511-B		Quadrant Assy. - Hydraulic Lift Control		Obsolete Serv. 515-A	9N	39-41
21441-S7-8		Bolt (Hex Head)-Hydraulic Lift Control Quadrant to Cover	4		9N	39-41
351428-S7-8		Washer (Lock)-Hydraulic Lift Control Quadrant to Cover Bolt	4		9N	39-41
9N-512	.75	Lever Assy. - Hydraulic Lift	1		9N	39-41
9N-514	1.55	Control Lever and Friction Plate Assy. Hydraulic Lift	1		9N	39-41
9N-515-A2	3.75	Quadrant - Hydraulic Lift Control	1		9N	39-41
9N-517	1.50	Shaft - Hydraulic Lift Control Lever	1		9N	39-41
33820-S7-8		Nut (Castle Hex)-Control Lever Arm to Friction Plate	1		9N	39-41
72026-S		Pin (Cotter)-Control Lever Arm to Friction Plate	1		9N	39-41
74175-S		Key (Woodruff #6)-Hydraulic Lift Control Lever	1		9N	39-41
9N-518	.05	Disc (Friction)-Hydraulic Lift Control	1		9N	39-41
9N-520-B	.35	Retainer - Hydraulic Lift Control Lever	1		9N	39-41
9N-521	.45	Stop Assy. - Hydraulic Lift Control Lever.	1		9N	39-41

* Not subject to regular discount.

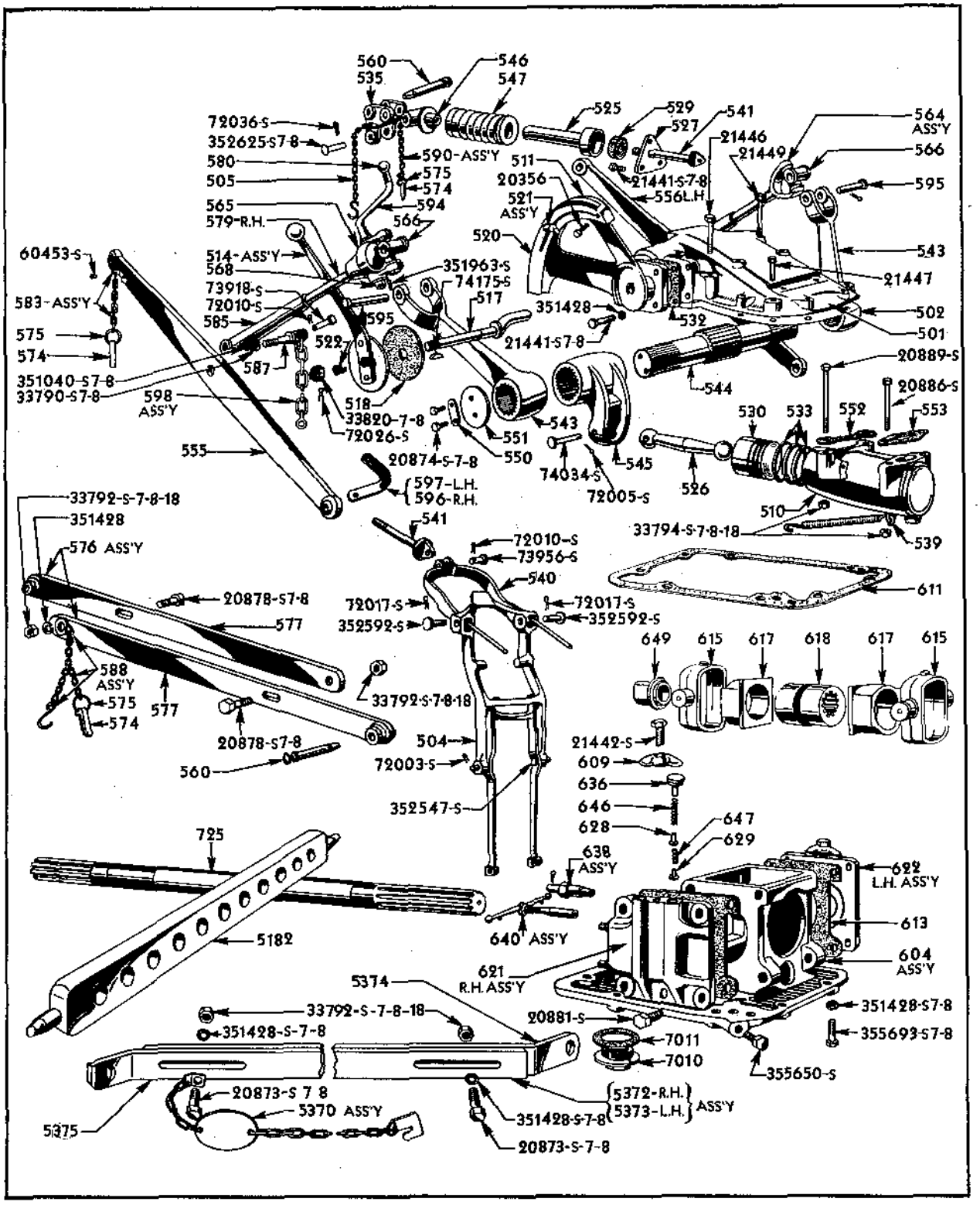

* Not subject to regular discount.

Part No.	Price	Part Name	Unit	Remarks	Type	Year
		HYDRAULIC LIFT (CONT'D)				
20356-S7-8	$	Bolt (Hex Head) Quadrant to Retainer, hydraulic lift control lever, (Type A Quadrant)	2	.....	9N	39-41
20306-S7-8		Bolt (Hex Head) Quadrant to Retainer, hydraulic lift control lever, (Type B Quadrant)	2	.....	9N	39-41
34745-S		Washer (Stop)-- Hydraulic Lift Control Lever	1	.....	9N	39-41
350923-S7-8		Nut (Special Wing) - Hydraulic Lift Control Lever Stop	1	.....	9N	39-41
9N-522	.06	Washer - Hydraulic Lift Control Spring	1	.....	9N	39-41
9N-523-A	.02	Gasket - Lower Link Support (Oval End)	2	.....	9N	39-41
9N-523-B	.02	Gasket - Lower Link Support (Square End)	2	.....	9N	39-41
9N-525-A	.30	Spring Seat - Hydraulic Lift (Obsolete Service B)	1	.....	9N	39-40
9N-525-B	.30	Spring Seat - Hydraulic Lift	1	.....	9N	39-41
9N-526	1.15	Connecting Rod - Hydraulic Lift	1	.....	9N	39-41
74034-S		Pin (Clevis) - Piston Rod	1	.....	9N	39-41
72005-S		Pin (Cotter) - Piston Rod to Arm Pin	1	.....	9N	39-41
9N-527	.08	Plate - Hydraulic Lift Cover	1	.....	9N	39-41
21441-S7-8		Bolt (Hex-Head) - Hydraulic Lift Cover Plate	3	.....	9N	39-41
9N-529	.01	Felt - Hydraulic Lift Spring Seat	1	.....	9N	39-41
9N-530	1.55	Piston - Hydraulic Lift	1	.....	9N	39-41
9N-531	3.95	Bushing - Hydraulic Lift	2	.....	9N	39-41
9N-532	.02	Gasket - Hydraulic Lift Control	1	.....	9N	39-41
9N-533	.12	Ring - Hydraulic Lift Piston	3	.....	9N	39-41
9N-535	2.15	Rocker - Hydraulic Lift	1	.....	9N	39-41
352625-S7-8		Pin (Clevis) - Hydraulic Lift	2	.....	9N	39-41
72036-S		Pin (Cotter)	2	.....	9N	39-41
9N-539	.06	Spring (Retracting)-Hydraulic Lift Fork	1	.....	9N	39-41
9N-540	1.45	Fork - Hydraulic Lift Spring Control	1	.....	9N	39-41
73956-S		Pin (Clevis) - Plunger to Hydraulic Lift Spring Control Fork	1	.....	9N	39-41
72010-S		Pin (Cotter) - Plunger to Hydraulic Lift Spring Control Fork Clevis Pin	1	.....	9N	39-41
9N-541	.50	Plunger - Hydraulic Lift Spring Control	1	.....	9N	39-41
9N-543	3.85	Arm - Hydraulic Lift	2	.....	9N	39-41
9N-544	5.90	Shaft - Hydraulic Lift	1	.....	9N	39-41
20874-S7-8		Bolt (Hex Head) Hydraulic Lift Shaft	4	.....	9N	39-41
9N-545	2.90	Arm - Hydraulic Lift Ram	1	.....	9N	39-41
9N-546	1.40	Yoke - Hydraulic Lift	1	.....	9N	39-41
9N-547-A	2.65	Spring - Hydraulic Lift	1	Before Tractor #47020	9N	39-41
9N-547-B	2.65	Spring - (Heavy) Hydraulic Lift	1	After #47019	9N	39-41
9N-550	.02	Washer (Lock) - Hydraulic Lift	2	.....	9N	39-41
9N-551	.06	Washer - Hydraulic Lift	2	.....	9N	39-41
9N-552	.01	Gasket - Hydraulic Lift	1	.....	9N	39-41
9N-553	.01	Gasket - Hydraulic Lift	1	.....	9N	39-41
9N-554	.30	Bearing Assy. - Hydraulic Lift Leveling Gear	1	.....	9N	39-41
9N-555	9.20	Link - Lower Lift R.H.	1	.....	9N	39-41
9N-556	9.20	Link - Lower Lift L.H.	1	.....	9N	39-41
9N-560	.45	Pin - Hydraulic Lift	2	.....	9N	39-41
9N-562-A	1.00	Plate - Lower Link Support (Oval End)	2	.....	9N	39-41
9N-562-B	1.00	Plate - Lower Link Support (Square End)	2	.....	9N	39-41
22267-S2		Bolt (Hex Head) - Lower Link Support to Axle Housing	2	.....	9N	39-41

* Not subject to regular discount.

Part No.	Price	Part Name	Unit	Remarks	Type	Year
		HYDRAULIC LIFT (CONT'D)				
72017-S		Pin (Cotter) - Lower Link Support to Rear Axle Housing	2		9N	39-41
9N-563	$ .50	Shaft - Lower Link	2		9N	39-41
33860-S7-8		Nut (Castle) - Lower Link Shaft	4		9N	39-41
72026-S		Pin (Cotter) - Lower Link Shaft	4		9N	39-41
351505-S7-8-18		Washer - (Flat) - Lower Link Shaft	4		9N	39-41
9N-564	2.75	Leveling Rod - Hydraulic Lift L. H.	1		9N	39-41
9N-565	3.00	Leveling Box - Hydraulic Lift	1		9N	39-41
74127-S		Plug (Expansion) - Hydraulic Lift Leveling Box Assy.	1		9N	39-41
353043-A1-S7-8		Fitting (Lubrication) - Hydraulic Lift Leveling Box Assy.	1		9N	39-41
9N-566	2.40	Knuckle - Hydraulic Lift	2		9N	39-41
9N-567	.30	Oil Tube - Differential Housing	1		9N	39-41
9N-568	1.30	Gear - Leveling Lever	1		9N	39-41
9N-569	16.00	Leveling Box Assy. - Hydraulic Lift	1		9N	39-41
9N-571		Clip and Chain Assy. - Lynch Pin Lower Link (Obsolete use 9N-583)	2		9N	39-41
9N-574	.30	Lynch Pin	4		9N	39-41
9N-575	.05	Ring - Chain	2		9N	39-41
9N-576	5.20	Link Assy. - Upper	1		9N	39-41
20878-S7-8		Bolt (Hex Head) - Upper Link Assy.	2		9N	39-41
351428-S7-8		Washer (Plain) - Upper Link Assy.	2		9N	39-41
33792-S7-8-18		Nut (Hex) - Hydraulic Lift Upper Link Bolt	2		9N	39-41
9N-577	2.25	Link (Half Upper)	2		9N	39-41
9N-578		Anchor Chain Assy. (Obsolete Service 9N-588)	1		9N	39-41
9N-579	4.95	Shaft - Leveling Gear - R.H.	1		9N	39-41
9N-580	.30	Ball - Lever	3		9N	39-41
9N-582	.35	Clevis - Lower Link, Anchor Chain	4		9N	39-41
9N-583-A	.17	Clip and Chain Assy. (Lower Link)	2		9N	39-41
9N-583-B	.12	Clip and Chain Assy. (Lower Link) (3 in line Holes)	2		9N	39-41
9N-585	1.80	Fork - Lift Rod R. H.	1		9N	39-41
353043-A2-S7-8		Fitting (Lubrication) - Hydraulic Lift Leveling Box Assy.	1		9N	39-41
9N-587-A		Bolt (Eye) Check Chain (Obsolete Use 9N-587-B)	2		9N	39-41
9N-587-B	.40	Bolt (Eye) Check Chain	2		9N	39-41
33860-S		Nut (Castle) - Check Chain Bolt (With 9N-587-A)	2		9N	39-41
33790-S7-8		Nut (Check) - For Check Chain Eye Bolt	2		9N	39-41
351040-S7-8		Nut (Eye Bolt) - Check Chain	2		9N	39-41
60453-S		Rivet-Lynch Pin Clip to lower link	4		9N	39-41
72035-S		Pin (Cotter) - Check Chain Eye Bolt	2		9N	39-41
9N-588	.60	Chain and Anchor Assy. Upper Link, Rear	1		9N	39-41
9N-590	.40	Chain and Anchor Assy. Upper Link, Front, R.	1		9N	39-41
9N-594	1.45	Lever (Leveling) - Hydraulic Lift	1		9N	39-41
351963-S		Rivet (Special Oval C'Sunk Head) - Leveling Lever to Leveling Lever Gear	1		9N	39-41
9N-595	.10	Pin (Leveling) - Hydraulic Lift Fork	4		9N	39-41
72035-S		Pin (Cotter) - Leveling Pin	4		9N	39-41
9N-596	.18	Anchor - Lower Link Check Chain R.H.	1		9N	39-41
9N-597	.18	Anchor-- Lower Link Check Chain L.H.	1		9N	39-41
21442-S7-8		Bolt (Hex Head) - Lower Link Check Chain Support to Power Take off	4		9N	39-41
9N-598	1.25	Chain Assy. (Lower Link Anchor)	2		9N	39-41

* Not subject to regular discount.

Part No.	Price	Part Name	Unit	Remarks	Type	Year
		HYDRAULIC LIFT (CONT'D)				
73918-S 7	$	Pin (Clevis) - Lower Link Anchor Chain ..	4	.....	9N	39-41
72010-S		Pin (Cotter) - Lower Link Anchor Chain ..	4	.....	9N	39-41
9N-599	11.35	Quadrant and Lever Assy. - Hydraulic Lift.	1	.....	9N	39-41

HYDRAULIC PUMP

9N-600	44.50	Hydraulic Pump	1	.....	9N	39-41
9N-604	13.25	Base Assy.-Hydraulic Pump	1	.....	9N	39-41
355693-S7-8		Bolt (Hex Head) - Hydraulic Pump Base to Center Housing	9	.....	9N	39-41
351428-S7-8		Washer (Special Plain) - Hydraulic Pump Base	9	.....	9N	39-41
355650-S		Bolt (Hex Head) 1/2-20-50 Spl.	1	.....	9N	39-41
9N-609	.20	Clamp - Hydraulic Pump	1	.....	9N	39-41
9N-611	.08	Gasket - Hydraulic Pump (Bottom)	1	.....	9N	39-41
9N-613	.04	Gasket - Hydraulic Pump	2	.....	9N	39-41
21442-S7-8		Bolt (Hex Head)	2	.....	9N	39-41
9N-615	2.20	Piston - Hydraulic Pump	2	.....	9N	39-41
9N-617	.85	Cam Block - Hydraulic Pump	2	.....	9N	39-41
9N-618	2.80	Cam - Hydraulic Pump	1	.....	9N	39-41
9N-621	8.65	Valve Chamber Assy. L. H. Hydraulic Pump.	1	.....	9N	39-41
9N-622	8.65	Valve Chamber Assy. R. H. Hydraulic Pump.	1	.....	9N	39-41
9N-625	2.00	Bushing (Hydraulic Control Valve)	1	.....	9N	39-41
9N-626	.04	Guide - Hydraulic Pump Valve	4	.....	9N	39-41
9N-628	.25	Valve, Outlet	4	.....	9N	39-41
9N-629	.20	Valve, Inlet	4	.....	9N	39-41
20881-S		Bolt (Hex Head) - Hydraulic Pump Valve .. Chamber to Pump Body	8	.....	9N	39-41
21442-S		Bolt (Hex Head)- Hydraulic Pump Valve Chamber Cap	2	.....	9N	39-41
9N-636	.20	Plug - Hydraulic Pump	4	.....	9N	39-41
9N-638	.75	Safety Valve Assy. - Hydraulic Pump	1	.....	9N	39-41
9N-640	1.20	Control Valve Assy. - Hydraulic Pump	1	.....	9N	39-41
9N-646	.02	Spring Outlet Valve	4	.....	9N	39-41
9N-647	.01	Spring Inlet Valve	4	.....	9N	39-41
9N-649	.70	Bushing - Hydraulic Pump	1	.....	9N	39-41

POWER TAKE-OFF ASSEMBLY AND PULLEY ATTACHMENT

9N-700-B	17.25	Power Take-Off Shaft Assy.	1	.....	9N	39-41
9N-710	9.60	Shaft and Sleeve Assy. - Power Take-Off .	1	.....	9N	39-41
73984-S		Pin-Power take-off shaft- After Tr. #7452 .	1	.....	9N	39-41
72003-S		Pin (Cotter) (For Clevis Pin)	1	.....	9N	
9N-712	2.55	Bearing Assy. (Rear) - Power Take-Off ...	1	.....	9N	39-41
9N-713	16.75	Gear Assy. - Power take-off	1	.....	9N	39-41
9N-714	.07	Washer - Power Take-Off	1	.....	9N	39-41
9N-715	2.40	Bearing Assy. - Power Take-Off	1	.....	9N	39-41
9N-716	.90	Hub - Power Take-Off Clutch	1	.....	9N	39-41
351406-S		Washer (Special) - Power Take-Off	1	.....	9N	39-41
20389-S		Bolt (Hex Head) - Power Take-Off Clutch Hub	1	.....	9N	39-41
34807-S		Washer (Lock) - Power Take-Off Clutch Hub Bolt	1	.....	9N	39-41
9N-717	2.75	Sleeve - Power Take-Off Clutch	1	.....	9N	39-41
9N-718	2.95	Support - Power Take-Off Shaft Bearing ..	1	.....	9N	39-41
355545-S		Bolt (Hex Head) - Power Take-Off Shaft Bearing Support	4	.....	9N	39-41
34807-S		Washer (Lock) - Power Take-Off Shaft Bearing Support	4	.....	9N	39-41

* Not subject to regular discount.

Part No.	Price	Part Name	Unit	Remarks	Type	Year

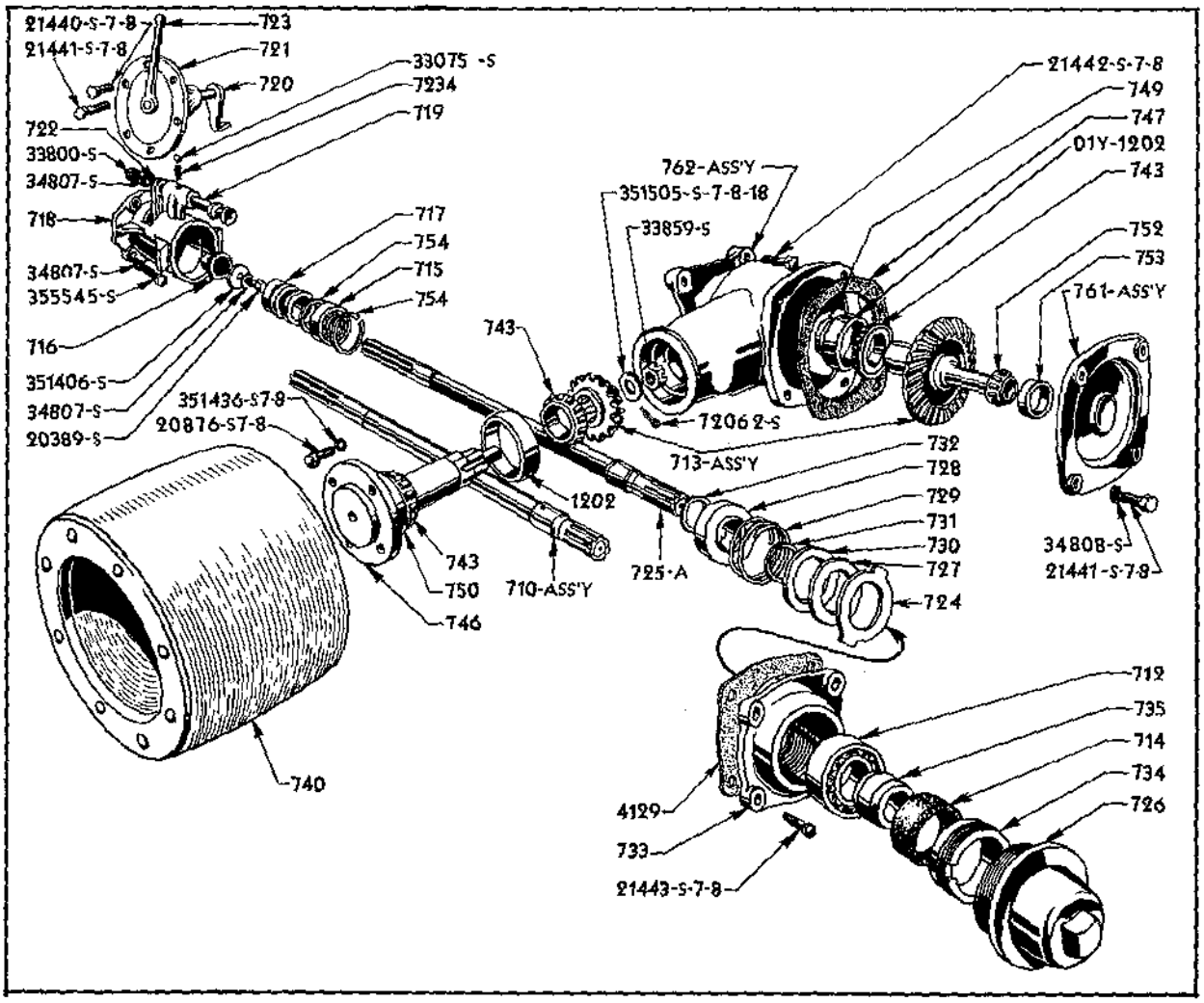

POWER TAKE-OFF ASSEMBLY AND PULLEY ATTACHMENT (CONT'D)

9N-719	$ 1.65	Rail - Power Take-Off Shift	1	.....	9N	39-41
79-7234		Spring - Power Take-Off Shifter	1	.....	9N	39-41
353075-S		Ball (Steel) - Power Take-Off Clutch Shaft	1	.....	9N	39-41
33800-S		Nut (Hex) - Power Take-Off Shift Rail ...	1	.....	9N	39-41
34807-S		Washer (Lock) - Power Take-Off Shift Rail	1	.....	9N	39-41
9N-720	.40	Fork - Power Take-Off Shift	1	.....	9N	39-41
9N-721	2.10	Plate - Power Take-Off Shift	1	.....	9N	39-41
21440-S7-8		Bolt (Hex Head) - Shifter Plate Power Take-Off	4	.....	9N	39-41
21441-S7-8		Bolt (Hex Head) - Side Cover and Brake Sector	2	.....	9N	39-41
9N-722	.35	Stop - Power Take-Off Shift	1	.....	9N	39-41
33800-S		Nut (Hex) - Power Take-Off Shift Stop ...	1	.....	9N	39-41
34807-S		Washer (Lock) - Power Take-Off Shift Stop	1	.....	9N	39-41
9N-723	.45	Lever - Power Take-Off Shift	1	.....	9N	39-41
60518-S		Rivet - Power Take-Off Shift Lever	1	.....	9N	39-41
9N-724	1.00	Washer - Power Take-Off	1	.....	9N	39-41

* Not subject to regular discount.

POWER TAKE-OFF ASSEMBLY AND PULLEY ATTACHMENT (CONT'D)

Part No.	Price	Part Name	Unit	Remarks	Type	Year
9N-725-A	$ 8.00	Shaft - Power Take-Off Before Tractor No. 7453	1		9N	39-41
9N-726	.85	Cap - Power Take-Off	1		9N	39-41
9N-727	.40	Seal - Power Take-Off	1		9N	39-41
9N-728-A	.35	Case - Power Take-Off Seal Before Tractor No. 7453	1		9N	39-41
9N-728-B	.35	Case - Power Take-Off After Tractor No. 7452	1		9N	
9N-729	.04	Spring - Power Take-Off	1		9N	39-41
9N-730	.07	Guide - Power Take-Off Spring	1		9N	39-41
9N-731	.07	Ring - Power Take-Off Clamp	1		9N	39-41
9N-732	.02	Ring (Snap) - Power Take-Off	1		9N	39-41
9N-733	1.60	Cover - Power Take-Off	1		9N	39-41
21443-S7-8		Bolt (Hex Head) Power Take-Off Housing Cover	4		9N	39-41
9N-734	.45	Retainer - Power Take-Off	1		9N	39-41
9N-735	.30	Sleeve - Power Take-Off	1		9N	39-41
9N-740	4.00	Pulley (9") - Power Take-Off (Specify 8" if required)	1		9N	39-41
20876-S7-8		Bolt (Hex Head) - Pulley To Power Take-Off Drive Shaft	4		9N	39-41
351436-S7-8		Washer (Lock) - Power Take-Off Pulley	4		9N	39-41
9N-743	1.20	Cone - Power Take-Off Gear Bearing	3		9N	39-41
01Y-1202		Cup - Power Take-Off Gear Bearing	3		9N	39-41
351505-S7-8-18		Washer (Flat)- Power Take-Off Pulley Driver Gear	1		9N	39-41
33859-S		Nut (Castle) - Power Take-Off Driving Gear	1		9N	39-41
72062-S		Pin (Cotter - Power Take-Off Driving Gear	1		9N	39-41
9N-746	1.15	Shaft - Power Take-Off Pulley	1		9N	39-41
9N-747	.06	Gasket - Power Take-Off Cover	1		9N	39-41
9N-749	.80	Seal - Power Take-Off Gear Bearing Oil	1		9N	39-41
9N-750	.85	Seal - Power Take-Off Pulley Bearing Oil.	1		9N	39-41
9N-752	.75	Cone and Roller Assy. - Power Take-Off Gear Pilot Bearing	1		9N	39-41
9N-753	.35	Cup - Power Take-Off Gear Pilot Bearing	1		9N	39-41
9N-754	.06	Ring (Snap) - Power Take-Off Bearing	2		9N	39-41
9N-760	*29.00	Power Take-Off and Pulley Assy.	1		9N	39-41
9N-761	3.70	Cover and Cup Assy. - Power Take-Off	1		9N	39-41
21441-S7-8		Bolt (Hex Head) - Power Take-Off Housing Cover	4		9N	39-41
9N-762	12.75	Housing and Cups Assy. - Power Take-Off	1		9N	39-41
353064-S		Plug (Pipe) - Drain	1		9N	39-41

WHEELS AND WHEEL HUBS

9N-1012	.10	Nut - Wheel Bolt (Front)	10		9N	39-41
9N-1015	4.90	Wheel Assy. - Front	2		9N	39-41
9N-1104	7.60	Hub Assy. - Front Wheel	2		9N	39-41
78-1107	.06	Bolt - Wheel Hub (Front Wheels Only) Press Fit	10		9N	39-41
9N-1108-C	10.00	Rim and Band Assy. - Rear 8 x 32	2		9N	39-41
9N-1108-D	**11.80	Rim and Band Assy. - Rear 10 x 28	2		9N	39-41
350719-S7-8		Bolt (Round Head) - Rim to Disc	12		9N	39-41
33806-S7-8-18		Nut (Hex) - Clamp to Disc Wheel	12		9N	39-41
351505-S7-8-18		Washer (Flat) - Rear Disc Wheel to Hub	12		9N	39-41

* Not subject to regular discount.
**See Bulletin for special price.

Part No.	Price	Part Name	Unit	Remarks	Type	Year
		WHEELS AND WHEEL HUBS (CONT'D)				
9N-1117	$ .12	Bolt - Rear Wheel Disc to Brake Drum	12	.....	9N	39-41
9N-1122-D	8.65	Disc - Wheel Rear 32 x 8.00	2	.....	9N	39-41
9N-1122-E	9.00	Disc - Rear Wheel 10 x 28	2	.....	9N	39-41
33806-S7-8-18		Nut (Hex) - Rear Axle to Rear Wheel	12	.....	9N	39-41
351505-S7-8-18		Washer (Flat) - Rear Axle to Rear Wheel Bolt	12	.....	9N	39-41
9N-1126	4.10	Brake Drum	2	.....	9N	39-41
9N-1139	.85	Cap - Front Hub	2	.....	9N	39-41
9N-1190	.12	Cap - Front Hub Dust	2	.....	9N	39-41
9N-1195	.04	Washer - Front Hub Bearing Retainer	2	.....	9N	39-41
B-1201	1.00	Cone and Roller Assy. - Front Wheel Inner Bearing	2	.....	9N	39-41
B-1202	.40	Cup - Front Wheel Inner Bearing	2	.....	9N	39-41
B-1216	.65	Cone and Roller Assy. - Front Wheel Outer Bearing	2	.....	9N	39-41
B-1217	.30	Cup - Front Wheel Outer Bearing	2	.....	9N	39-41

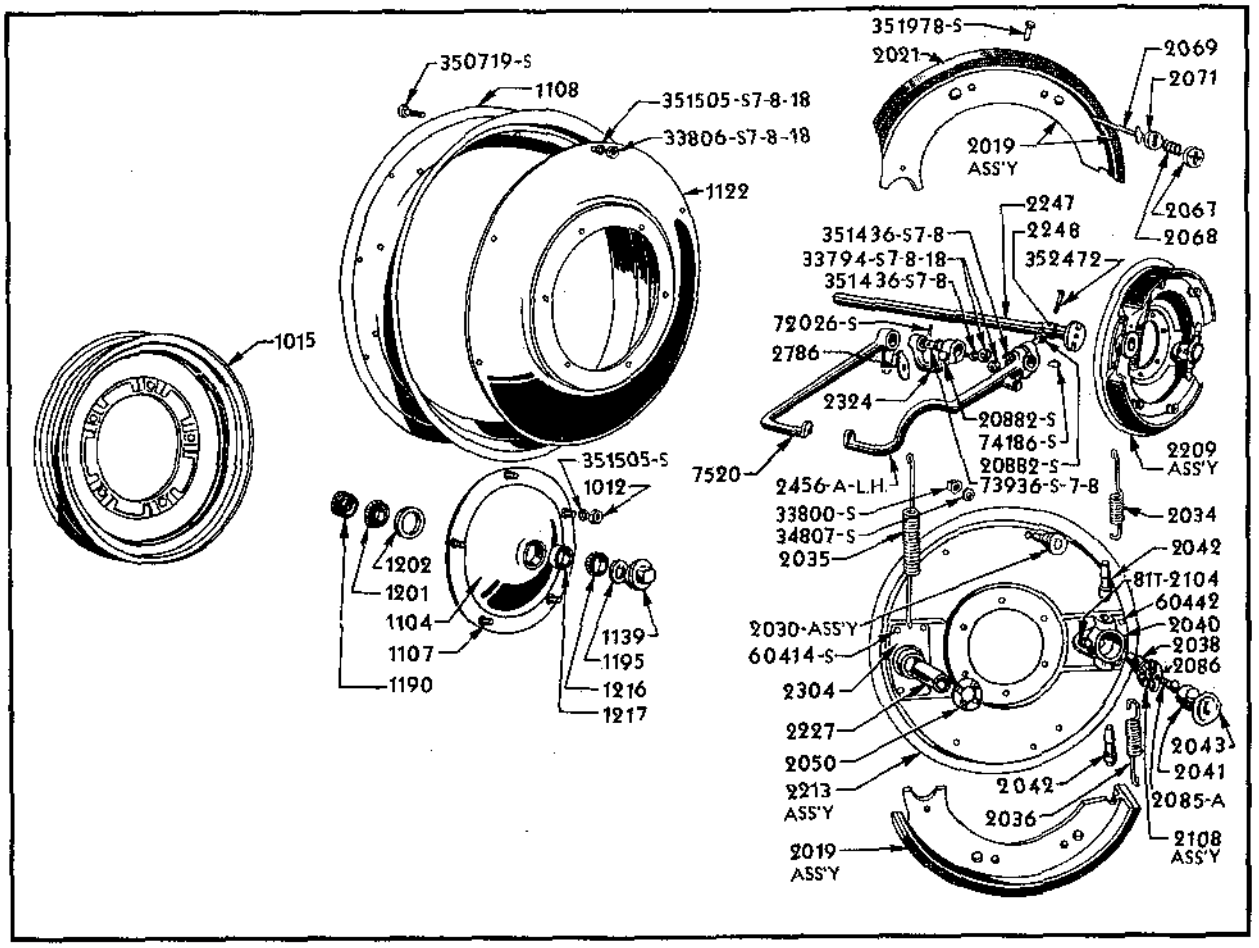

* Not subject to regular discount.

Part No.	Price	Part Name	Unit	Remarks	Type	Year
		BRAKES				
9N-2019	$ 3.70	Brake Shoe and Lining Assy.	4		9N	39-41
92Y-2021-B	1.00	Lining - Brake Shoe	4		9N	39-41
351978-S		Rivet - Brake Lining to Brake Shoe	60		9N	39-41
9N-2030	.25	Equalizer Assy. - Brake	2		9N	39-41
33800-S7-8		Nut (Hex) - Brake Eccentric	2		9N	39-41
34807-S		Washer (Lock) - Brake Equalizer	2		9N	39-41
9N-2034	.06	Spring (Return) - Brake Shoe	2		9N	39-41
9N-2035	.12	Spring (Return) - Brake Shoe - Long	2		9N	39-41
9N-2036	.06	Spring (Return) - Brake Shoe Adjusting Side Lower	2		9N	39-41
79-2038	.20	Stem (Adjusting) - Brake	2		9N	39-41
9N-2040	.85	Bracket (Adjusting) - Brake	2		9N	39-41
60442-S		Rivet (Round Head) - Brake Adjusting Bracket to Brake Plate	6		9N	39-41
9N-2041	.40	Wedge - Adjusting	2		9N	39-41
81T-2042	.25	Link - Brake Shoe	4		9N	39-41
9N-2043	.02	Cap - Brake Adjusting Bracket	2		9N	39-41
9N-2050	.90	Wedge - (Operating) - Brake	2		9N	39-41
78-2067-C	.01	Cap - Brake Shoe Hold Down Spring	4		9N	39-41
78-2068-C	.01	Spring (Hold Down) - Brake Shoe	4		9N	39-41
9N-2069	.01	Pin (Hold Down) - Brake Shoe	8		9N	39-41
78-2071	.01	Nut - Brake Shoe Hold Down Spring Centralizer	4		9N	39-41
78-2085-A	.02	Pin - Brake Adjusting Stem Spring	2		9N	39-41
78-2086	.01	Spring (index) Brake Adjusting Stem	2		9N	39-41
81T-2108	.25	Spring Assy. - Adjusting Stem	2		9N	39-41
9N-2209	14.50	Brake Assy. - R.H.	1		9N	39-41
9N-2210	14.50	Brake Assy. - L.H.	1		9N	39-41
9N-2213	4.70	Brake Carrier Plate and Brackets Assy. Right or Left	1		9N	39-41
9N-2217	.40	Ring - Felt, Brake Dust Seal	2		9N	41
9N-2227	.15	Bushing - Graphite	2		9N	39-41
9N-2247	4.50	Shaft - Brake	2		9N	39-41
9N-2248	.25	Collar - Brake Shaft	2		9N	39-41
352472-S7-8		Pin - Brake Shaft Collar	2		9N	39-41
9N-2252	.40	Ring - Brake Dust Seal	2		9N	41
9N-2279	.05	Clip - Wiring	1		9N	39-41
9N-2304	.85	Bracket - Brake Camshaft	2		9N	39-41
60414-S		Rivet (Round Head) - Brake Camshaft Bracket	8		9N	39-41
9N-2324	2.20	Arm - Brake Pawl	1		9N	39-41
20882-S7-8		Bolt (Hex Head) - Brake Pawl Arm	1		9N	39-41
33794-S7-8-18		Nut (Hex) - Brake Pawl Arm	1		9N	39-41
351436-S7-8		Washer (Lock) - Brake Pawl Arm	1		9N	39-41
9N-2455-A	3.75	Pedal - Brake R.H.	1		9N	39-41
9N-2456-A	3.75	Pedal - Brake L.H.	1		9N	39-41
74186-S		Key (Woodruff) - Brake Pedal and Pawl	2		9N	39-41
20882-S7-8		Bolt (Hex Head) - Brake Pedal	4		9N	39-41
33794-S7-8-18		Nut (Hex) - Brake Pedal Bolt	4		9N	39-41
351436-S7-8		Washer (Lock) - Brake Pedal	4		9N	39-41
78-2477	.07	Bushing - Brake Cross Shaft	1		9N	39-41
9N-2786	.40	Pawl - Brake	2		9N	39-41
73936-S7-8		Pin (Clevis) - Brake Pawl L.H.	1		9N	39-41
74079-S7-8		Pin (Clevis) - Brake Pawl R.H.	1		9N	39-41
72026-S		Pin (Cotter) - Brake Pawl	2		9N	39-41
9N-2796	.70	Sector - Brake	2		9N	39-41

* Not subject to regular discount

Part No.	Price	Part Name	Unit	Remarks	Type	Year
		FRONT AXLE				
9N-3006	$ 8.00	Axle - Front R.H. Half With Bushings	1	.....	9N	39-41
9N-3007	8.00	Axle - Front L.H. Half With Bushings	1	.....	9N	39-41
353027-A2-S7-8		Fitting - Lubrication	2	.....	9N	39-41
9N-3010	6.60	Center - Front Axle	1	.....	9N	39-41
9N-3029	10.75	Support Assy. - Front Axle	1	.....	9N	39-41
9N-3039	.18	Bushing Assy. - Front Axle	1	.....	9N	39-41
21182-S7-8		Bolt (Hex Head) - Front Axle Center to Half	4	.....	9N	39-41
33806-S7-8-18		Nut (Hex) - Front Axle Center to Front Axle Half Bolt	4	.....	9N	39-41
351505-S-7-8-18		Washer (Flat) - Front Axle Center to Front Axle Half Bolt	4	.....	9N	39-41
20880-S7-8		Bolt (Hex Head) - Front Axle Support to Oil Pan	6	.....	9N	39-41
33792-S7-8		Nut (Hex) Front Axle Support	6	.....	9N	39-41
9N-3105	12.75	Spindle Assy. - Front Axle	2	.....	9N	39-41
351129-S		Nut (Castle) - Front Axle Spindle Assy. .	2	.....	9N	39-41
72054-S		Pin (Cotter) - Spindle Nut	2	.....	9N	39-41
9N-3109	.25	Bushing - Spindle	4	.....	9N	39-41
9N-3122	.18	Pin - Spindle Bolt Locking	2	.....	9N	39-41
33792-S7-8-18		Nut (Hex) - Front Axle Spindle Pin	2	.....	9N	39-41
351436-S7-8		Washer (Lock) - Front Axle Arm	2	.....	9N	39-41
9N-3123	.40	Bearing - Front Axle Spindle	2	.....	9N	39-41
9N-3126-A	1.40	Pin - Front Axle	1	.....	9N	39-41
350635-S7-8		Bolt (Hex Head) - Front Axle Pin	1	.....	9N	39-41
33790-S7-8		Nut Check (Hex Head) - Axle to Axle Support	1	.....	9N	39-41

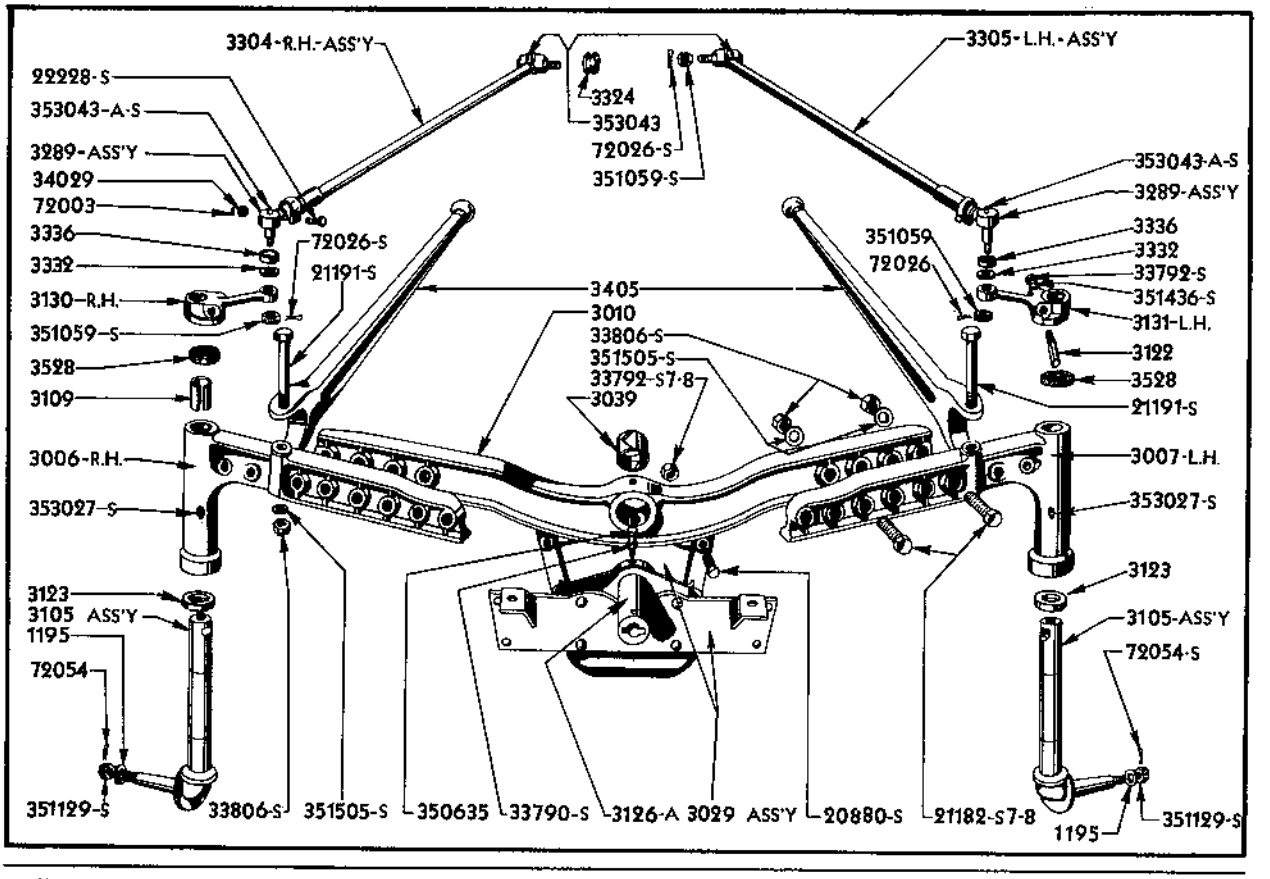

* Not subject to regular discount

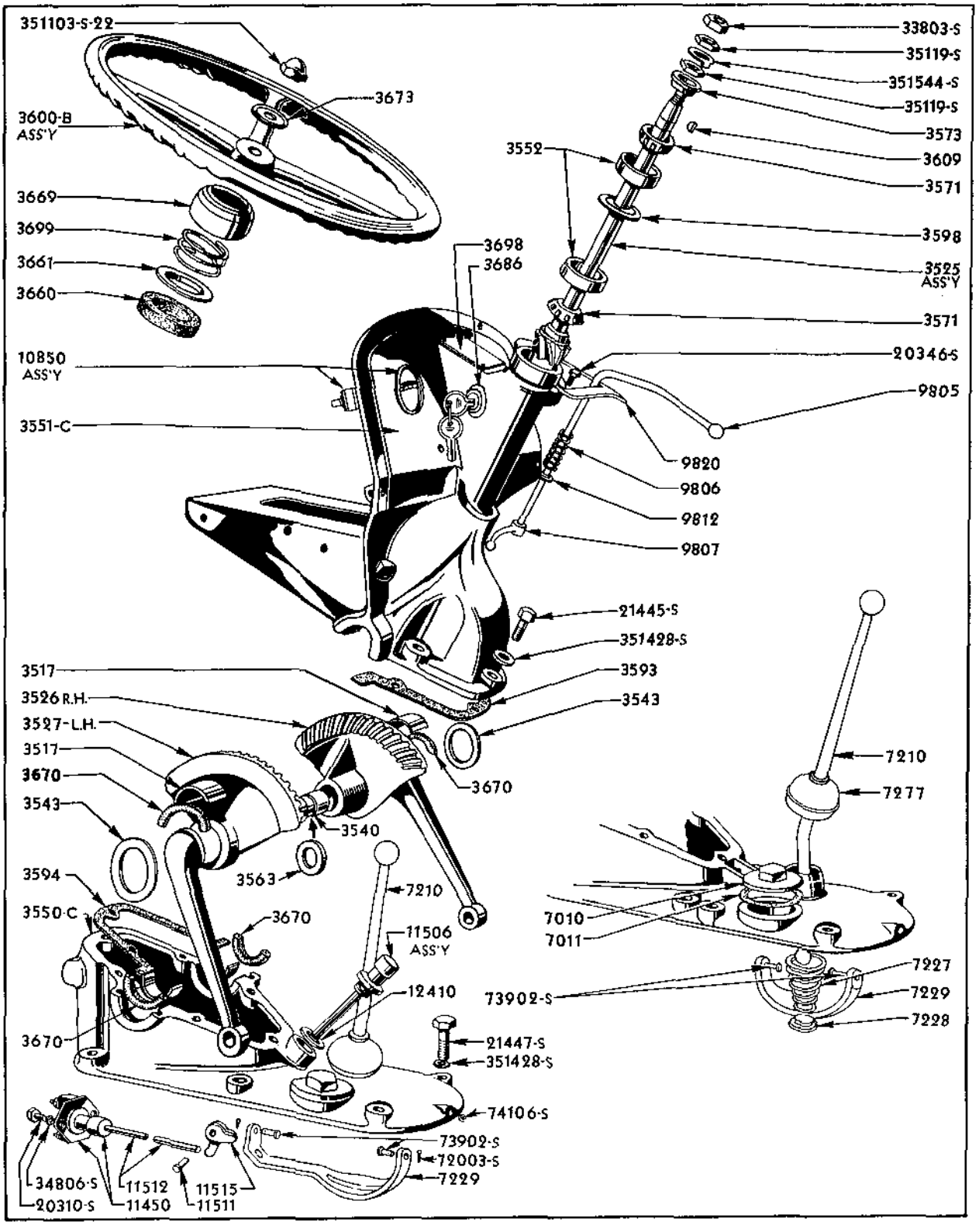
351103-S-22
3673
3600-B ASS'Y
3669
3699
3661
3660
10850 ASS'Y
3551-C
33803-S
35119-S
351544-S
35119-S
3573
3609
3571
3552
3598
3525 ASS'Y
3571
20346-S
9805
3698
3686
9820
9806
9812
9807
21445-S
351428-S
3593
3543
3517
3526 R.H.
3527-L.H.
3517
3670
3543
3670
3540
3563
3594
3550-C
3670
7210
11506 ASS'Y
12410
3670
21447-S
351428-S
74106-S
73902-S
72003-S
7229
34806-S
20310-S
11512
11450
11515
11511
7210
7277
7010
7011
7227
7229
7228
73902-S

Part No.	Price	Part Name	Unit	Remarks	Type	Year
		FRONT AXLE (CONT'D)				
9N-3130	$ 3.30	Arm - Spindle R.H.	1		9N	39-41
9N-3131	3.30	Arm - Spindle L.H.	1		9N	39-41
78-3289-B	1.10	Spindle Ball Joint Assy.	2		9N	39-41
351059-S7		Nut (Castle) - Spindle Ball Joint Assy.	4		9N	39-41
72026-S		Pin (Cotter) - Drag Link	4		9N	39-41
9N-3304	3.85	Link Assy. - Steering Drag R.H.	1		9N	39-41
9N-3305	3.85	Link Assy. - Steering Drag L.H.	1		9N	39-41
353043-A2		Fitting (Lubrication) - Steering Drag Link	4		9N	39-41
9N-3324	.30	Cover Assy. - Dust	2		9N	39-41
78-3332	.02	Cover - Spindle Connecting Rod Ball Stud Dust	2		9N	39-41
78-3336	.01	Retainer - Steering Drag Link and Tie Rod Grease	2		9N	39-41
22228-S		Bolt - Steering Drag Link Clamp	2		9N	39-41
34029-S		Nut (Hex) - Steering Drag Link Clamp	2		9N	39-41
72003-S		Pin (Cotter) - Steering Drag Link Clamp	2		9N	39-41
9N-3405	4.45	Rod - Front Radius	2		9N	39-41
21191-S7-8		Bolt (Hex Head) - Front Axle to Radius Rod	2		9N	39-41
33806-S7-8-18		Nut (Hex) - Front Axle to Radius Rod Bolt	2		9N	39-41
351505-S7-8-18		Washer (Flat) - Front Axle to Radius Rod Bolt	2		9N	39-41
9N-3440	.65	Cap - Radius Rod Ball	2		9N	39-41
88523-S		Stud (Screw) - Radius Rod Ball Cap	4		9N	39-41
33792-S7-8		Nut (Hex) - Radius Rod Ball Spacer Cap	4		9N	39-41
351436-S7-8		Washer (Lock) - Radius Rod Ball Cap Stud.	4		9N	39-41
9N-3442	1.30	Spacer - Radius Rod Ball	2		9N	39-41
88398-S		Stud (Screw) - Radius Rod Ball Spacer	2		9N	39-41
33792-S7-8		Nut (Hex) - Radius Rod Spacer	2		9N	39-41
351436-S7-8		Washer (Lock) - Radius Rod Ball Spacer	2		9N	39-41

STEERING GEAR

9N-3501-A	*50.00	Steering Gear Assy. Less Instruments and Throttle Control	1		9N	39-41
9N-3501-B	*53.75	Steering Gear Assy. Less Instruments and Throttle Control	1		9N	39-41
9N-3501-C	*52.50	Steering Gear Assy. Less Instruments and Throttle Control	1		9N	41
9N-3517	.35	Bearing - Steering Sector	4		9N	39-41
9N-3525	8.35	Shaft and Pinion - Steering Gear	1		9N	39-41
33803-S7-8		Nut (Hex Head) - Steering Wheel	1		9N	39-41
351119-S		Nut (Hex) - Steering Shaft	2		9N	39-41
351544-S		Washer (Lock) - Steering Shaft	1		9N	39-41
9N-3526	10.50	Sector - Steering Gear R.H.	1		9N	39-41
9N-3527	10.50	Sector - Steering Gear L.H.	1		9N	39-41
9N-3528	.02	Seal - Steering Arm Dust	1		9N	39-41
9N-3540	.70	Shaft - Steering Sector	1		9N	39-41
9N-3543-A	.30	Washer - Steering Sector Outer Thrust Thin	2		9N	39-41
9N-3543-B	.30	Washer - Steering Sector Outer Thrust Thick	2		9N	39-41
9N-3550-A	*8.65	Housing - Steering Gear Lower	1		9N	39-41
9N-3550-B		Housing - Steering Gear Lower	1	Obsolete Service 9N-3550-C, 9N-7157-B, 9N-7158	9N	39-41

* Not subject to regular discount.

Part No.	Price	Part Name	Unit	Remarks	Type	Year
		STEERING GEAR (CONT'D)				
9N-3550-C	$ *8.60	Housing - Steering Gear Lower		After trac. #47507	9N	40-41
74106-S		Plug (Expansion) - Steering Gear Housing	1		9N	39-41
21447-S7-8		Bolt (Hex Head) - Lower Steering Housing to Transmission Housing	6		9N	39-41
351428-S7-8		Washer (Plain) - Lower Steering Housing to Transmission Housing	6		9N	39-41
9N-3551-A	*16.00	Housing - Steering Gear Upper	1		9N	39-41
9N-3551-C	*16.00	Housing - Steering Gear Upper	1	After 47507	9N	40-41
21448-S7-8		Bolt (Hex Head) - Upper to Lower Steering Gear Housing	6		9N	39-41
351428-S7-8		Washer (Plain) - Upper to Lower Steering Gear Housing	6		9N	39-41
B-3552	.25	Cup - Steering Gear Worm Bearing Lower	2		9N	39-41
9N-3563-A	.30	Washer - Steering Sector Inner Thrust Thick	1		9N	39-41
9N-3563-B	.30	Washer - Steering Sector Inner Thrust Thin	1		9N	39-41
68-3571-A	.25	Roller Assy. - Steering Gear	2		9N	39-41
9N-3573	.50	Cone - Steering Gear Bearing	2		9N	39-41
9N-3593-B	.01	Gasket - Steering Gear Housing - Rear	1		9N	39-41
9N-3594	.01	Gasket - Steering Gear Housing - Front	1		9N	39-41
9N-3598	.04	Retainer - Steering Column Oil	1		9N	39-41
9N-3600-A		Wheel Assy. - Steering	1	Obsolete Service Band 351103 -S22, and 9N-3673	9N	39-41
9N-3600-B	4.00	Wheel Assy. - Steering	1		9N	39-41
351103-S-22		Nut - Steering Wheel	1		9N	39-41
B-3609	.02	Key - Woodruff	1		9N	39-41
9N-3627	.80	Cap - Steering Wheel Center	1		9N	39-41
9N-3660	.06	Seal - Steering Column Dust	1		9N	39-41
9N-3661	.18	Retainer - Steering Column Seal	1		9N	39-41
9N-3669	.15	Cap - Steering Column	1		9N	39-41
9N-3670	.06	Packing - Steering Sector	4		9N	39-41
9N-3673	.50	Washer - Steering Wheel	1		9N	39-41
9N-3685	.50 pr	Key - Ignition Lock #1050 to 1300	2		9N	39-41
9N-3686-C	.80	Lock Cylinder Assy. - Ignition	1		9N	39-41
26456-S7-8		Screw (Round Head) - Ignition Lock Cylinder Assy.	2		9N	39-41
351118-S7-8		Nut (Hex) - Ignition Lock Cylinder Assy.	1		9N	39-41
9N-3698	.06	Patent Plate - Ford	1		9N	39-41
92032-S19		Screw (Round Head Drive) - Patent Plate To Steering Gear Housing	4		9N	39-41
9N-3699	.40	Spring - Steering Column Dust Seal	1		9N	39-41
9N-3701	.06	Lens - Ignition Indicator Lamp	1		9N	39-41

REAR AXLE

9N-4000	*178.00	Rear Axle Assy.	1		9N	39-41
9N-4005	*92.00	Axle Assy. - Rear - Less Hydraulic Mechanism, Pump, Axle Shafts, and Brakes.	1		9N	39-41
9N-4012-B	*16.00	Housing - Rear Axle R.H.	1		9N	39-41
74121-S		Plug (Expansion) - Rear Axle Housing	1		9N	39-41
353064-S		Plug Drain - Rear Axle Housing	1		9N	39-41
9N-4013-B	*16.00	Housing - Rear Axle Shaft L.H.	1		9N	39-41
21444-S7-8		Bolt (Hex Head) - Rear Axle Housing to Center Housing	12		9N	39-41

* Not subject to regular discount

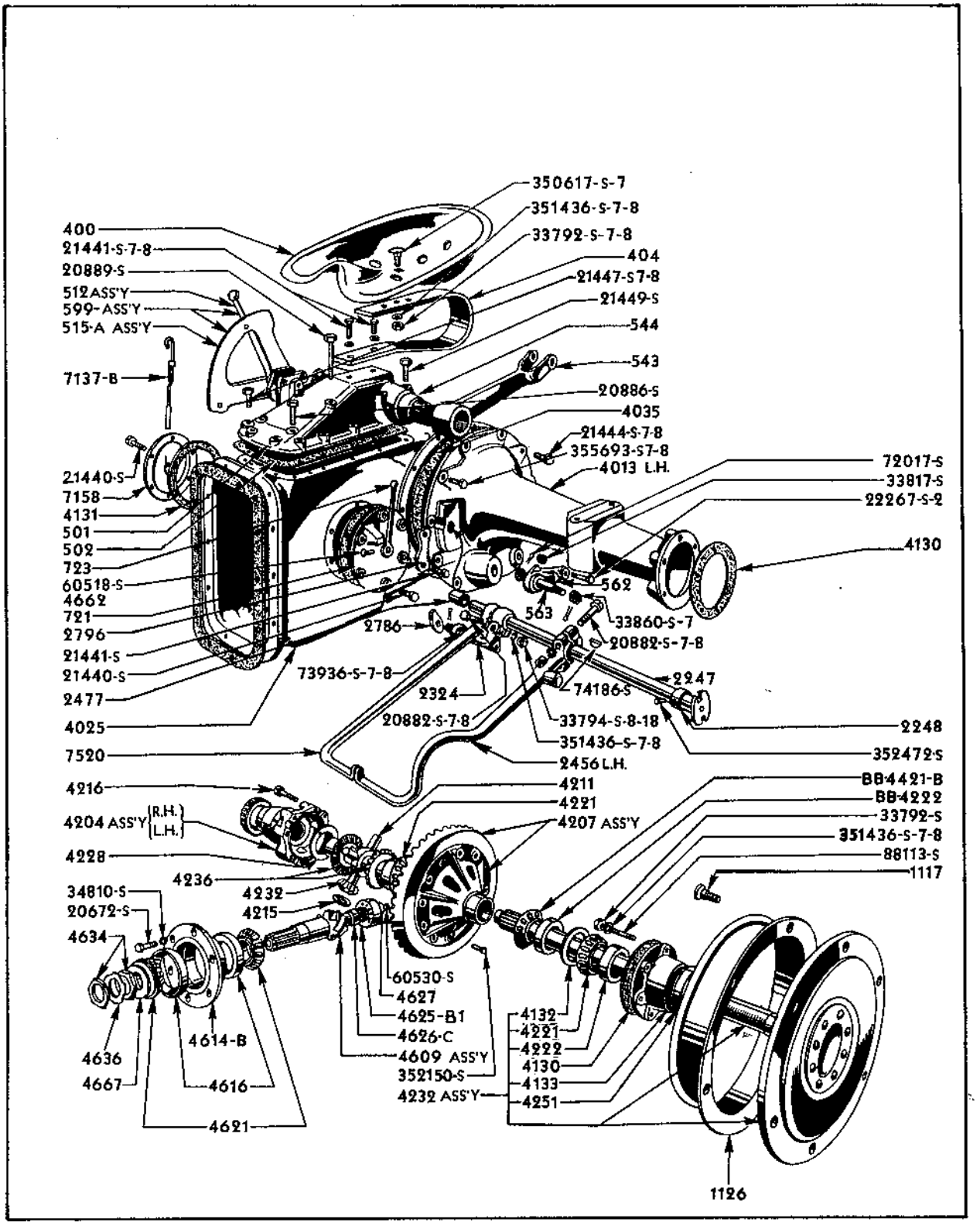
350617-S-7
351436-S-7-8
33792-S-7-8
400
21441-S-7-8
20889-S
512 ASS'Y
599-ASS'Y
515-A ASS'Y
7137-B
404
21447-S7-8
21449-S
544
543
20886-S
4035
21444-S-7-8
355693-S7-8
4013 L.H.
21440-S
7158
4131
501
502
723
60518-S
4662
721
2796
21441-S
21440-S
2477
4025
7520
72017-S
33817-S
22267-S-2
4130
562
563
33860-S-7
20882-S-7-8
2786
73936-S-7-8
2324
74186-S
2247
20882-S-7-8
33794-S-8-18
351436-S-7-8
2248
352472-S
2456 L.H.
4216
4204 ASS'Y R.H. L.H.
4228
4236
4232
4215
34810-S
20672-S
4634
4211
4221
4207 ASS'Y
BB-4421-B
BB-4222
33792-S
351436-S-7-8
88113-S
1117
60530-S
4627
4625-B1
4626-C
4609 ASS'Y
352150-S
4232 ASS'Y
4132
4221
4222
4130
4133
4251
4636
4667
4614-B
4616
4621
1126

Part No.	Price	Part Name	Unit	Remarks	Type	Year
		REAR AXLE (CONT'D)				
355693-S7-8		Bolt 5/16-14 - Special	9		9N	39-41
9N-4025	$30.00	Housing - Center	1		9N	39-41
353064		Pipe Plug - Drain	1		9N	39-41
9N-4035	.20	Gasket - Rear Axle Differential Housing	2		9N	39-41
9N-4129	.04	Gasket - Differential Housing (Rear)	1		9N	39-41
9N-4130	.06	Gasket - Axle Housing (Outer)	2		9N	39-41
9N-4131	.06	Gasket - Differential Housing Side	2		9N	39-41
9N-4132	.50	Collar - Axle Shaft Bearing	2		9N	39-41
9N-4133	2.60	Retainer - Axle Shaft Bearing	2		9N	39-41
88113-S		Stud (Screw) - Rear Axle Housing to Bearing Retainer	12		9N	39-41
33791-S18		Nut (Regular) - Rear Axle Shaft Bearing Retainer to Axle Shaft Housing	12		9N	39-41
351436-S7-8		Washer (Lock) - Axle Bearing Retainer to Axle Shaft Housing	12		9N	39-41
9N-4150	.30	Trough Assy. - Differential Bearing Oil	1		9N	39-41
9N-4195	3.15	Spacer - Driving Gear Thrust Block	1		9N	39-41
20388-S2		Bolt (Hex Head) - Driving Gear Thrust Block Spacer to Rear Axle Center Housing	2		9N	39-41
34807-S		Washer (Lock) - Thrust Block to Axle Housing Bolt	2		9N	39-41
9N-4201	*34.00	Differential Assy. - Rear Axle	1		9N	39-41
9N-4203	*28.00	Gear, Pinion, and Case - Differential	1		9N	39-41
9N-4204	13.00	Case Assy. - Differential Gear	1		9N	39-41
9N-4207	32.50	Gear & Case Assy. (Service Only)	1		9N	39-41
79-4210	16.50	Gear Only, Driving	1		9N	39-41
352150-S		Rivet (Round Head) - Driving Gear to Differential Gear Case	12		9N	39-41
9N-4211	2.60	Spider - Differential	1		9N	39-41
91T-4215	.75	Gear - Differential Pinion	4		9N	39-41
BB-4216-C	.20	Screw - Differential Gear Case	8		9N	39-41
9N-4221	2.70	Cone and Roller Assy. - Rear Wheel	2		9N	39-41
BB-4221-B	2.65	Cone and Roller Assy. - Axle Shaft Inner Bearing	2		9N	39-41
9N-4222	1.30	Cup - Rear Wheel Bearing	2		9N	39-41
BB-4222	1.45	Cup - Axle Shaft Inner Bearing	2		9N	39-41
79-4228	.20	Washer - Differential Gear Thrust	2		9N	39-41
9N-4229-A	.05	Shim - Rear Axle Bearing .003 Thick	2		9N	39-41
9N-4229-B	.05	Shim - Rear Axle Bearing .005 Thick	2		9N	39-41
9N-4229-C	.05	Shim - Rear Axle Bearing .010 Thick	2		9N	39-41
79-4230	.04	Washer (Thrust) - Differential Pinion	4		9N	39-41
9N-4231	32.25	Axle Shaft and Brake Drum Assy. with Bearing, Retainer and Seal	1		9N	39-41
9N-4232	28.00	Axle Shaft with Bearing, Retainer, Seal and Studs	1		9N	39-41
60592-S		Rivet - Axle Shaft to Hub Rear	16		9N	39-41
91T-4236	2.10	Gear - Differential	2		9N	39-41
9N-4251	.70	Oil Seal - Rear Axle Bearing	2		9N	39-41
9N-4605	4.60	Drive Shaft Assy.	1		9N	39-41
79-4609	7.00	Pinion - Gear Assy.	1		9N	39-41
BB-4614-B	4.50	Sleeve, Pin and Bearing Cups Assy. Driving Pinion Bearing	1		9N	39-41
20672-S		Bolt (Hex Head)-Pinion Bearing Retainer to Housing	6		9N	39-41
34810-S		Washer (Lock)-Pinion Bearing Retainer to Rear Axle Housing	6		9N	39-41
BB-4616-B	1.35	Cup - Driving Pinion Bearing	2		9N	39-41

* Not subject to regular discount.

Part No.	Price	Part Name	Unit	Remarks	Type	Year
		REAR AXLE (CONT'D)				
BB-4621-B	$ 2.65	Cone and Roller Assy. - Driving Pinion Bearing	2		9N	39-41
BB-4625-B1	1.55	Bearing Assy. - Driving Pinion Pilot	1		9N	39-41
BB-4626-D	.45	Race, Inner, Driving Pinion Pilot Bearing	1		9N	39-41
BB-4627	.03	Ring (Lock)-Driving Pinion Pilot Bearing.	1		9N	39-41
60530-S		Rivet (Round Head) Driving Pinion Bearing Retainer	2		9N	39-41
B-4634	.20	Nut (Lock)-Driving Pinion Bearing	2		9N	39-41
B-4636	.04	Washer (Lock)-Driving Pinion Bearing	1		9N	39-41
9N-4662	.18	Gasket - Differential to Transmission Housing	1		9N	39-41
BB-4667	.15	Washer (Thrust)-Driving Pinion Bearing	1		9N	39-41
BB-4668-B		Sleeve - Service BB-4614-B				
		DRAWBAR (See Illustration on Page 6)				
9N-5182	6.80	Drawbar	1		9N	39-41
9N-5370	.85	Chain and Wedge Assy. - Drawbar	1		9N	39-41
9N-5372	1.65	Stay Assy. - Drawbar R.H.	1		9N	39-41
9N-5373	1.45	Stay Assy. - Drawbar L.H.	1		9N	39-41
9N-5374	.65	Stay - Drawbar Upper	1		9N	39-41
9N-5375	.50	Stay - Drawbar Lower	1		9N	39-41
20873-S7-8		Bolt (Hex Head)-Drawbar Stay	4		9N	39-41
33792-S7-8-18		Nut (Hex)-Drawbar Stay Bolt	4		9N	39-41
351428-S7-8		Washer (Special Plain)-Drawbar Stay	4		9N	39-41
		MUFFLER ASSEMBLY				
9N-5230-A	2.40	Muffler Assy.	1		9N	39-41
9N-5251	.65	Clamp - Muffler Inlet Pipe	2		9N	39-41
21477-S7-8		Bolt (Hex Head)-Exhaust Pipe Clamp	2		9N	39-41
33825-S7-8		Nut (Hex)-Exhaust Pipe Clamp Bolt	2		9N	39-41
9N-5252	.40	Bracket and Clamp Assy. - Muffler	1		9N	39-41
20881-S		Bolt (Hex Head)-Muffler Clamp to Transmission Housing	1		9N	39-41
33792-S7-8		Nut (Hex)-Muffler Clamp to Transmission Housing	1		9N	39-41
351436-S7-8		Washer (Lock)-Muffler Clamp to Transmission Housing	1		9N	39-41
20426-S7-8		Bolt (Hex Head)-Muffler Clamp	1		9N	39-41
33797-S7-8		Nut (Hex)-Muffler Clamp Bolt	1		9N	39-41
34806-S		Washer (Lock)-Muffler Clamp Bolt	1		9N	39-41
9N-5255	.40	Pipe (Outlet) - Muffler	1		9N	39-41
9N-5260	.10	Bracket - Muffler Outlet Pipe	1		9N	39-41
88423-S7-8		Stud - Clamp to Rear Axle Housing	1		9N	39-41
33792-S7-8		Nut (Hex)-Clamp to Rear Axle Housing Stud	1		9N	39-41
20396-S7-8		Bolt (Hex Head)-Muffler Outlet Pipe Bracket	1		9N	39-41
34806-S7-8		Washer (Lock) - Muffler Outlet Pipe	1		9N	39-41
33797-S7-8		Nut (Hex)-Muffler Outlet Pipe Bracket Bolt	1		9N	39-41
9N-5290	.85	Shield Assy. - Exhaust Pipe	1		9N	39-41
9N-5293	.10	Clamp - Exhaust Pipe Shield	1		9N	39-41
24327-S7-8		Bolt (Hex Head)-Exhaust Pipe Shield Clamp	2		9N	39-41
34806-S		Washer (Lock)-Exhaust Pipe Shield Assy. Bolt	2		9N	39-41

* Not subject to regular discount.

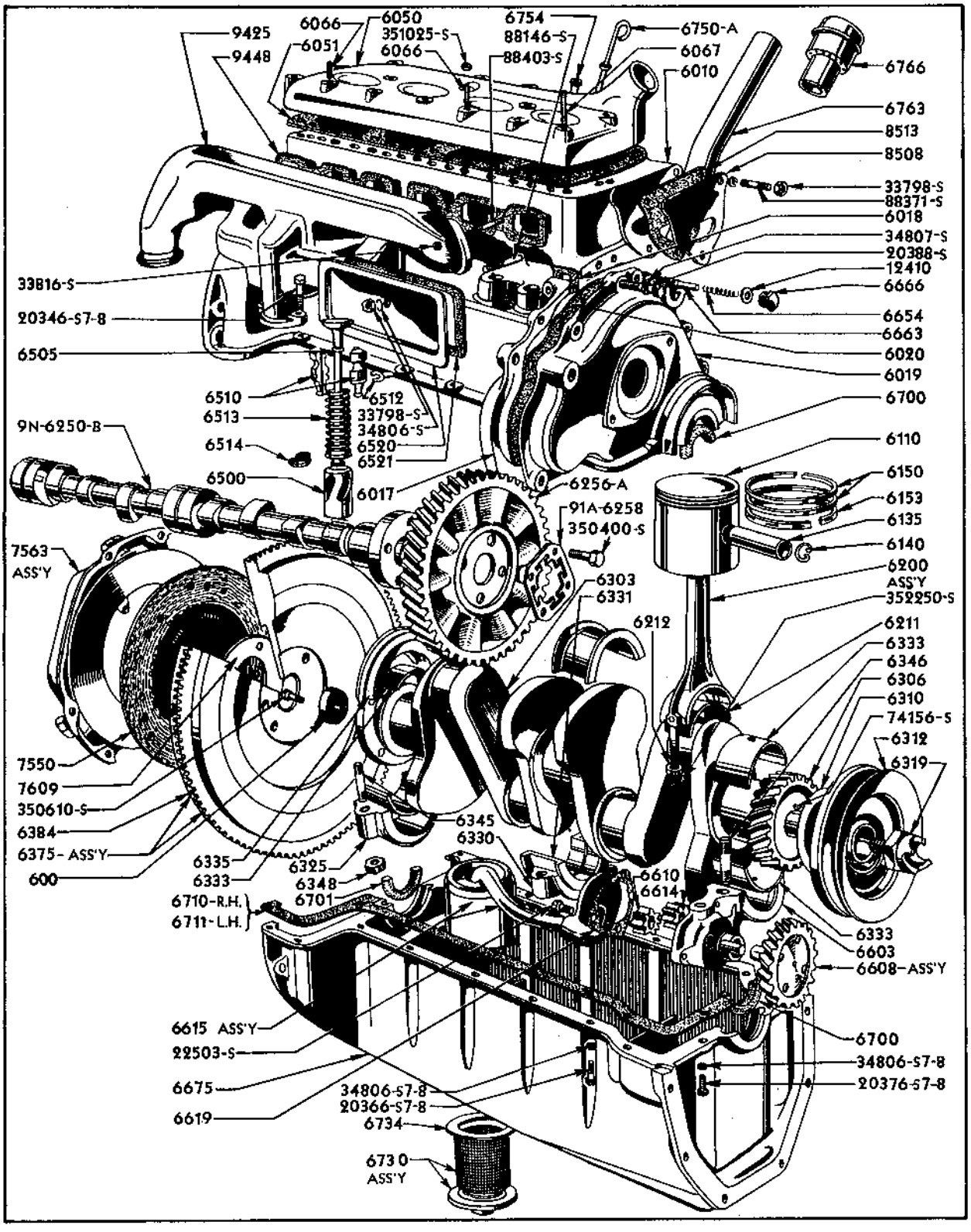
9425
9448
6066
6051
6050
351025-S
6066
6754
88146-S
88403-S
6750-A
6067
6010
6766
6763
8513
8508
33798-S
88371-S
6018
34807-S
20388-S
12410
6666
6654
6663
6020
6019
6700
33816-S
20346-S7-8
6505
6510
6513
6514
6500
9N-6250-B
6512
33798-S
34806-S
6520
6521
6017
6256-A
91A-6258
350400-S
6110
6150
6153
6135
6140
6200
ASS'Y
352250-S
7563
ASS'Y
6303
6331
6212
6211
6333
6346
6306
6310
74156-S
6312
6319
7550
7609
350610-S
6384
6375- ASS'Y
600
6335
6333
6325
6345
6330
6348
6701
6710-R.H.
6711-L.H.
6610
6614
6333
6603
6608-ASS'Y
6615 ASS'Y
22503-S
6675
6619
34806-S7-8
20366-S7-8
6734
6700
34806-S7-8
20376-S7-8
6730
ASS'Y

Part No.	Price	Part Name	Unit	Remarks	Type	Year
		ENGINE				
9N-6005	*170.00	Engine Assy. (Less Transmission and Clutch) (See Bulletin #111)	1		9N	39-41
9N-6010	* 53.00	Cylinder Block Assy. with Sleeves and Bearing Caps	1		9N	39-41
9N-6011	*105.00	Cylinder Block Assy. with Pistons, Connecting Rods and Valves	1		9N	39-41
74120-S		Plug (Expansion)-Rear of Cylinder Block	1		9N	39-41
88146-S		Stud (Screw)-Valve Chamber Cover	2		9N	39-41
88371-S		Stud (Screw)-Water Pump Housing to Cylinder Block	3		9N	39-41
88403-S		Stud (Screw)-Manifold to Cylinder Block	4		9N	39-41
9N-8115	.20	Drain Plug				
9N-6017	2.15	Cover - Timing Gear Side	1		9N	39-41
9N-6018	.01	Gasket - Timing Gear Side Cover	1		9N	39-41
20388-S		Bolt (Hex Head)-Timing Gear Cover	3		9N	39-41
34807-S		Washer (Lock)-Timing Gear Cover Bolt	3		9N	39-41
9N-6019-B	3.90	Cover - Cylinder Front	1		9N	39-41
B-17552	.03	Plug - Cylinder Front Cover	2		9N	39-41
9N-6020	.01	Gasket - Cylinder Front Cover	1		9N	39-41
20388-S		Bolt (Hex Head)-Cylinder Front Cover Plate	6		9N	39-41
34807-S		Washer Cylinder Front Cover Plate	6		9N	39-41
9N-6022	.04	Gasket - Governor to Cylinder Timing Gear Cover Side	1		9N	39-41
9N-6043	.03	Plug (Front)-Engine Block Oil Pipe	2		9N	39-41
9N-6050-B	8.65	Cylinder Head	1		9N	39-41
9N-6051	.65	Gasket - Cylinder Head	1		9N	39-41
351025-S7-8		Nut (Hex)-Cylinder Head Stud	18		9N	39-41
99A-6055	1.45	Sleeve - Cylinder Block	4		9N	39-41
40-6057-B	.20	Insert, Intake Valve	4		9N	39-41
52-6057-B	.15	Insert, Exhaust Valve	4		9N	39-41
9N-6066	.03	Stud (Short)-Cylinder Head	15		9N	39-41
18-6066	.03	Stud (Medium)-Cylinder Head	1		9N	39-41
48-6067	.03	Stud (Long)-Cylinder Head	2		9N	39-41
9N-6100	3.90	Piston and Connecting Rod Assy.	4		9N	39-41
99A-6110-A	1.50	Piston (Standard)	4		9N	39-41
99A-6135-A	.30	Pin - Piston	4		9N	39-41
78-6140	.01	Retainer - Piston Pin	8		9N	39-41
99A-6150-A	.10	Ring - Piston	8		9N	39-41
99A-6153-A	.12	Ring - Piston Oil Control	4		9N	39-41
9N-6200	2.55	Rod - Connecting Assy.	4		9N	39-41
9N-6211	.25	Liner - Connecting Rod Bearing	8		9N	39-41
18-6212	.03	Nut - Connecting Rod	8		9N	39-41
352250-S		Pin (Cotter)-Connecting Rod-Special	8		9N	39-41
9N-6250-B	7.25	Camshaft	1		9N	39-41
9N-6251		Camshaft and Gear Assy. (Obsolete Service 9N-6250-B 9N-6256-A 91A-6258 350400-S)	1		9N	39-41
91A-6256-A	2.45	Gear, Camshaft			9N	39-41
350400-S		Bolt - Camshaft Gear to Camshaft	4		9N	39-41
91A-6258	.05	Lock Ring	1		9N	39-41
91A-6266	.10	Seal - Camshaft Rear Bearing	1		9N	39-41
9N-6271	.70	Bushing - Camshaft, Front	1		9N	39-41
9N-6272	1.10	Bushing - Camshaft, Center and Rear	2		9N	39-41
9N-6303	18.50	Crankshaft	1		9N	39-41
48-6306	.90	Gear - Crankshaft	1		9N	39-41
74156-S		Key (Woodruff)	1		9N	39-41
40-6310	.07	Slinger - Crankshaft Oil	1		9N	39-41
9N-6312	1.20	Pulley Assy. - Crankshaft	1		9N	39-41
B-6319-A	.30	Ratchet - Crankshaft	1		9N	39-41
9N-6325	.85	Cap - Crankshaft Bearing (Rear)	1		9N	39-41

* Not subject to regular discount.

Part No.	Price	Part Name	Unit	Remarks	Type	Year
		ENGINE (CONT'D)				
9N-6330	$ .85	Cap - Crankshaft Bearing (Center)	1		9N	39-41
9N-6331	.90	Liner - Main Bearing (Center)	2		9N	39-41
9N-6333	.40	Liner - Main Bearing Front and Rear	4		9N	39-41
91A-6335	.25	Seal - Crankshaft Rear Bearing Oil	1		9N	39-41
9N-6345	.12	Stud (Short)-Main Bearing Cap	5		9N	39-41
9N-6346	.15	Stud (Long)-Main Bearing Cap	1		9N	39-41
B-6348	.05	Nut (Castle) 1/2 - 20 Special	6		9N	39-41
9N-6375	6.75	Fly Wheel and Ring Gear Assy.	1		9N	39-41
350645-S		Bolt (Hex Head)-Flywheel to Crankshaft	4		9N	39-41
9N-6384	1.15	Gear - Flywheel Starting	1		9N	39-41
B-6387	.04	Dowel - Flywheel to Crankshaft	2		9N	39-41
18-6397	.03	Dowel - Cylinder Block to Transmission and Front Cover	4		9N	39-41
18-6500-A4	.25	Push Rod - Valve	8		9N	39-41
9N-6505	.50	Valve - Exhaust	4		9N	39-41
40-6505-B	.50	Valve - Intake	4		9N	39-41
40-6510-A	.30Pr.	Bushing - Valve Guide	16		9N	39-41
40-6512	.02	Retainer - Valve Guide Bushing	8		9N	39-41
78-6513	.12	Spring - Valve	8		9N	39-41
40-6514-B	.03	Retainer - Valve Spring	8		9N	39-41
9N-6520	.25	Cover - Valve Chamber	2		9N	39-41
9N-6521	.10	Gasket - Valve Chamber Cover	2		9N	39-41
88146-S		Stud (Screw)-Valve Chamber Cover	2		9N	39-41
33798-S		Nut (Hex)-Valve Chamber	2		9N	39-41
34806-S		Washer (Lock)-Valve Chamber Cover Stud	2		9N	39-41
9N-6603	2.45	Body Assy. - Oil Pump	1		9N	39-41
9N-6608	1.85	Drive Gear and Shaft Assy. - Oil Pump	1		9N	39-41
52-6610-B	.45	Gear - Oil Pump Driven	1		9N	39-41
9N-6612	.08	Bushing - Oil Pump Body	1		9N	39-41
52-6614-B	.45	Gear - Oil Pump Driving	1		9N	39-41
9N-6615	2.10	Screen Cover Assy. - Oil Pump	1		9N	39-41
22503-S		Bolt (Hex Head) - Oil Pump Cover	3		9N	39-41
9N-6619	.01	Gasket - Oil Pump Cover	1		9N	39-41
01A-6654	.01	Spring - Oil Relief Valve	1		9N	39-41
01A-6663	.02	Plunger - Oil Relief Valve	1		9N	39-41
68-6666	.06	Nut - Oil Relief Valve	1		9N	39-41
9N-6675	20.50	Pan-Oil	1		9N	39-41
72038-S		Pin (Cotter) (Drain Hole)	1		9N	39-41
B-6700	.08	Packing - Oil Pan and Cylinder Front Cover	2		9N	39-41
9N-8115	.20	Plug (Oil Pan Drain)	1		9N	39-41
91A-6701	.10	Packing - Oil Pan Rear	2		9N	39-41
9N-6710	.12	Gasket - Oil Pan R.H.	1		9N	39-41
9N-6711	.12	Gasket - Oil Pan L.H.	1		9N	39-41
20366-S2		Bolt (Hex Head) Oil Pan to Block Bolt	13		9N	39-41
20376-S7-8		Bolt - Oil Pan to Front Cover	3		9N	39-41
34806-S7-8		Washer (Lock)-Engine Pan to Block Bolts	16		9N	39-41
9N-6730	1.70	Plug and Screen Assy. - Oil Drain	1		9N	39-41
91A-6734	.04	Gasket - Drain Plug	1		9N	39-41
9N-6750-A	.10	Indicator - Oil Level	1		9N	39-41
9N-6754	.15	Tube-Oil Level Indicator	1		9N	39-41
9N-6763	.45	Pipe Assy. - Oil Filler	1		9N	39-41
9N-6766	.30	Cap Assy. - Oil Filler	1		9N	39-41

TRANSMISSION

9N-7000	*71.50	Transmission Assy.	1		9N	39-41
21441-S7-8		Bolt (Hex Head)-Transmission Housing to Engine Assy.	9		9N	39-41

* Not subject to regular discount.

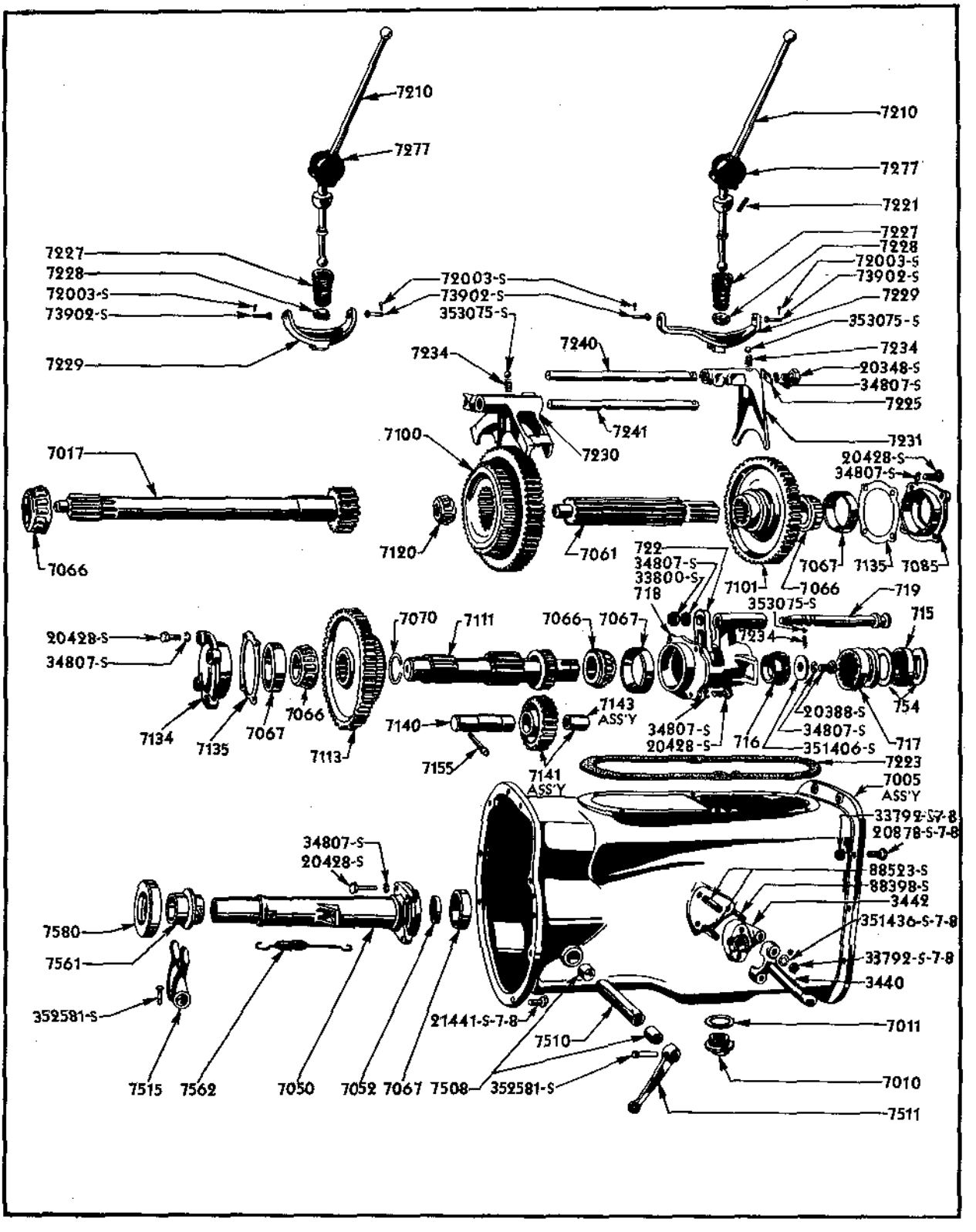
7210
7277
7221
7227
7228
72003-S
73902-S
7229
353075-S
7234
20348-S
34807-S
7225
7231
7240
7241
7230
7100
7017
7066
7120
7061
20428-S
34807-S
7067
7135
7085
722
34807-S
33800-S
718
7101
7066
353075-S
719
715
7070
7111
7066
7067
7234
7143
ASS'Y
7134
7135
7067
7066
7113
7140
7155
7141
ASS'Y
34807-S
20428-S
716
20388-S
34807-S
351406-S
754
717
7223
7005
ASS'Y
33792-S-7-8
20878-S-7-8
88523-S
88398-S
3442
351436-S-7-8
33792-S-7-8
3440
7011
7010
7511
7580
7561
352581-S
7515
7562
7050
7052
7067
7508
352581-S
21441-S-7-8
7510

Part No.	Price	Part Name	Unit	Remarks	Type	Year
		TRANSMISSION (CONT'D)				
20880-S7-8		Bolt (Hex Head)-Transmission to Center Housing	9	.....	9N	39-41
33792-S7-8		Nut (Hex)-Transmission to Center Housing Bolt	9	.....	9N	39-41
9N-7005-A		Case Assy. - Transmission (Obsolete) Used on Tractors Before #47508	1	Obsolete Service 9N-7005-B 9N-7137-B 9N-7158..	9N	39-41
9N-7005-B	$47.00	Case Assy. - Transmission	1	After Tr. 9N-47507.	9N	39-41
9N-7010	1.50	Plug (Drain)-Transmission	3	.....	9N	39-41
9N-7011	.02	Gasket - Transmission Drain Plug	3	.....	9N	39-41
9N-7017-A	4.35	Gear - Transmission Main Drive	1	.....	9N	39-41
9N-7020	.07	Tube (Short)-Transmission Oil Level Indicator	1	.....	9N	39-41
9N-7021	.25	Tube (Long)-Transmission Oil Level Indicator	1	.....	9N	39-41
9N-7050	2.20	Retainer - Transmission Main Drive Gear Bearing	1	.....	9N	39-41
20428-S		Bolt (Hex Head)-Transmission Retainer	4	.....	9N	39-41
34807-S		Washer (Lock)-Transmission Retainer Bolt.	4	.....	9N	39-41
78-7052	.30	Seal - Oil, Transmission Main Drive Gear Bearing		.....	9N	39-41
9N-7061	3.95	Shaft (Main)-Transmission	1	.....	9N	39-41
9N-7066	1.45	Cone and Roller Assy. - Transmission Main and Countershaft Bearing	4	.....	9N	39-41
9N-7067	.80	Cup - Transmission Main and Countershaft Bearing	4	.....	9N	39-41
9N-7070	.06	Ring (Snap)-Transmission Countershaft	1	.....	9N	39-41
9N-7085	1.05	Retainer - Transmission Main Shaft Bearing	1	.....	9N	39-41
20428-S		Bolt (Hex Head)-Transmission Retainer	4	.....	9N	39-41
34807-S		Washer (Lock)-Transmission Retainer Bolt.	4	.....	9N	39-41
9N-7086	.01	Gasket - Transmission Bearing Retainer	2	.....	9N	39-41
9N-7100	8.35	Gear (Sliding)-Transmission Low and High.	1	.....	9N	39-41
9N-7101	6.00	Gear (Sliding)-Transmission Second and Reverse	1	.....	9N	39-41
9N-7111	5.10	Countershaft-Transmission	1	.....	9N	39-41
9N-7113-A	7.10	Gear - Transmission Countershaft	1	.....	9N	39-41
9N-7120	1.40	Bearing Assy. - Transmission Pilot	1	.....	9N	39-41
9N-7134	1.00	Retainer-Transmission Countershaft Bearing	1	.....	9N	39-41
20428-S		Bolt (Hex Head)-Transmission Retainer	4	.....	9N	39-41
34807-S		Washer (Lock)-Transmission Retainer Bolt.	4	.....	9N	39-41
9N-7135-A	.04	Shim - Transmission Bearing Retainer .003	2	.....	9N	39-41
9N-7135-B	.04	Shim - Transmission Bearing Retainer .004	2	.....	9N	39-41
9N-7135-C	.04	Shim - Transmission Bearing Retainer .007	2	.....	9N	39-41
9N-7135-D	.04	Shim - Transmission Bearing Retainer .010	2	.....	9N	39-41
9N-7135-E	.04	Shim - Transmission Bearing Retainer .020	2	.....	9N	39-41
9N-7137-A	.18	Indicator (Oil Level)-Transmission	1	.....	9N	39-40
9N-7137-B	.15	Indicator (Oil Level) - Transmission After (#47508)		After Tr. #47508 ..	9N	40-41
9N-7140	.60	Shaft - Reverse Idler Gear	1	.....	9N	39-41
9N-7141	2.70	Gear and Bushing Assy. - Reverse Idler	1	.....	9N	39-41
9N-7143	.35	Bushing - Transmission Idler Gear	1	.....	9N	39-41

* Not subject to regular discount.

Part No.	Price	Part Name	Unit	Remarks	Type	Year
		TRANSMISSION (CONT'D)				
9N-7155	$ .06	Pin (Retaining)-Transmission Reverse Idler Shaft	1		9N	39-41
9N-7158	.90	Side Cover Assy.	1		9N	39-41
21440-S7-8		Bolt (Hex Head)-Differential Housing Cover (Side)	4		9N	39-41
21441-S7-8		Bolt (Hex Head)-Differential Housing Side Cover and Brake Sector	2		9N	39-41
9N-7210	2.15	Lever (Shift)-Transmission Gear	1		9N	39-41
9N-7221	.02	Pin - Gear Shift Lever	1		9N	39-41
9N-7223-A	.15	Gasket - Gear Shift Housing (on 7005-A Housing)	1	Before tractor #47508	9N	39-41
9N-7223-B	.15	Gasket - Gear Shift Housing		After tractor #47507	9N	39-41
9N-7225	.05	Plate - Gearshift Fork Rod	1		9N	39-41
20348-S		Bolt (Hex Head)-Shift Rod Anchor	1		9N	39-41
34807-S		Washer (Lock)-Shift Rod Anchor Bolt	1		9N	39-41
9N-7227	.08	Spring - Shifter Lever	1		9N	39-41
9N-7228	.25	Seat - Gear Shift Lever Spring	1		9N	39-41
9N-7229-A	.80	Lock - Gear	1		9N	39-41
9N-7229-B	.25	Lock - Gear	1		9N	39-41
73902-S		Pin (Clevis)-Steering Gear	2		9N	39-41
72003-S		Pin (Cotter)-Drag Link Clamp	2		9N	39-41
9N-7230-A	2.30	Fork (Shifter)-Transmission Low and High Gear	1		9N	39-41
9N-7230-B	4.10	Fork (Shifter)-Transmission Low and High Gear	1		9N	39-41
9N-7231-A	1.95	Fork (Shifter)-Transmission Second and Reverse	1		9N	39-41
9N-7231-B	2.70	Fork (Shifter)-Transmission Second and Reverse	1		9N	39-41
79-7234	.02	Spring - Shifter Fork	2		9N	39-41
353075-S		Ball (Steel)-Transmission Shifter Fork	2		9N	39-41
9N-7240	.80	Rod - Transmission Selector R.H.	1		9N	39-41
9N-7241	.80	Rod - Transmission Selector L.H.	1		9N	39-41
9N-7277	.18	Seal (Dust)-Gear Shift Lever	1		9N	39-41
9N-7334	.60	Rod Assy. - Clutch Release	1		9N	39-41
33800-S		Nut (Hex)-Clutch Release Rod	1		9N	39-41
97013-S		Clevis (Adjustable)-Clutch Release Rod	1		9N	39-41
73912-S7-8		Pin (Clutch Release Rod Clevis)	2		9N	39-41
9N-7503	1.10	Shaft and Arm Assy. - Clutch Release	1		9N	39-41
9N-7508	.12	Bushing - Clutch Pedal	1		9N	39-41
40-7508	.07	Bushing - Clutch Release Shaft	1		9N	39-41
B-7510	.55	Shaft (Release)-Clutch	1		9N	39-41
353027-A2-S7-8		Fitting (Lubrication)-Clutch Release Shaft	1		9N	39-41
9N-7511	.30	Arm - Clutch Release Shaft	1		9N	39-41
352581-S7-8		Pin (Special Flat Head)-Clutch Release Shaft to Arm	1		9N	39-41
48-7515	.40	Fork - Clutch Release Shaft	1		9N	39-41
352581-S7-8		Pin (Special Flat Head)-Clutch Release Shaft to Fork	1		9N	39-41
9N-7520	2.25	Pedal-Clutch	1		9N	39-41
9N-7530	.75	Rod and Yoke Assy. (Release)-Clutch	1		9N	39-41
72010-S		Pin (Cotter)-Clutch Rod Clevis	2		9N	39-41
73912-S7-8		Pin (Clevis)-Clutch Pedal	2		9N	39-41
97013-S		Clevis Rod and Yoke - Clutch Release Assy.	1		9N	39-41
33800-S7-8		Bolt Rod and Yoke - Clutch Release Assy.	1		9N	39-41

* Not subject to regular discount.

Part No.	Price	Part Name	Unit	Remarks	Type	Year
		TRANSMISSION (CONT'D)				
40-7549	$ .45	Facings - Clutch Disc	2		9N	39-41
351926-S		Rivet (Flat Head C'sunk)-Clutch Disc	24		9N	39-41
91A-7550	3.75	Disc Assy. - Clutch	1		9N	39-41
60006-S		Rivet (Flat Head)-Clutch Disc Assy.	6		9N	39-41
9N-7561	.75	Hub - Clutch Release Bearing	1		9N	39-41
9N-7562	.08	Spring - Clutch Release Bearing	2		9N	39-41
09A-7563	5.00	Pressure Plate and Cover Assy. Clutch	1		9N	39-41
350433-S		Screw (Hex Head)-Clutch to Flywheel	6		9N	39-41
34806-S		Washer (Lock)-Clutch to Flywheel Bolt	6		9N	39-41
78-7580	1.75	Bearing Assy. - Clutch Release	1		9N	39-41
B-7600-A	1.25	Bearing - Clutch Pilot	1		9N	39-41
B-7609	.03	Retainer - Flywheel Dowel	1		9N	39-41

RADIATOR AND GRILLE

9N-8005	21.00	Radiator Assy.	1		9N	39-41
21442-S8		Bolt (Hex Head)-Radiator to Support	2		9N	39-41
351436-S8		Washer (Lock)-Radiator to Support Bolt	2		9N	39-41
9N-8032	.35	Pad - Radiator	1		9N	39-41
9N-8100	.90	Cap Assy. - Radiator	1		9N	39-41
9N-8115	.20	Cock (Drain)-Radiator	1		9N	39-41
40-8125	.02	Anti-Squeak - Radiator to Bracket	2		9N	39-41
9N-8206-C	9.75	Grille - Radiator	1		9N	39-41
20311-S7-8		Bolt (Hex Head)-Grille to Support	2		9N	39-41
33798-S8		Nut (Hex)-Grille to Support	2		9N	39-41
34806-S8		Washer (Lock)-Grille to Support	2		9N	39-41
9N-8215	.30	Ornament - Radiator	1		9N	39-41
33795-S		Nut (Hex)-Name Plate to Grille	1		9N	39-40
350835-S		Nut (Speed)-Name Plate to Grille	1		9N	39-41
9N-8260	.25	Hose - Radiator	1		9N	39-41
9N-8286	.55	Hose - Radiator Outlet to Water Pump	1		9N	39-41
60-8287	.04	Clamp Assy. - Radiator Hose	4		9N	39-41
27153-S		Screw (Round Head)-Hose Clamp Assy.	4		9N	39-41
34141-S		Nut (Square)-Hose Clamp Assy. Screw	4		9N	39-41
9N-8430-B	.07	Support - Radiator Grille Lower	2		9N	39-41
20318-S8		Bolt (Hex Head)-Grille Bracket to Radiator Bracket	4		9N	39-41
33798-S8		Nut (Hex)-Grille Bracket to Radiator Bracket Bolt	4		9N	39-41
34706-S8		Washer (Flat)-Grille Bracket to Radiator Support	4		9N	39-41
34806-S8		Washer (Lock)-Grille Bracket to Radiator Support Bolt	4		9N	39-41
9N-8032	.35	Pad - Weather	1		9N	39-41

WATER PUMP

(See Illustration on Page 28)

9N-8501	7.25	Water Pump Assy.	1		9N	39-41
9N-8505	2.20	Housing - Water Pump	1		9N	39-41
20318-S7-8		Bolt (Hex Head)-Water Pump Housing to Cylinder Block	1		9N	39-41
88371-S		Stud (Screw)-Water Pump Housing to Cylinder Block	3		9N	39-41
33798-S		Nut (Hex) Water Pump Stud	3		9N	39-41
34806-S		Washer (Lock)-Water Pump Housing to Cylinder Block	4		9N	39-41
9N-8507	.03	Gasket - Water Pump	1		9N	39-41
9N-8508	.15	Cover - Water Pump	1		9N	39-41
78-8512	.40	Impeller - Water Pump	1		9N	39-41

* Not subject to regular discount.

Part No.	Price	Part Name	Unit	Remarks	Type	Year

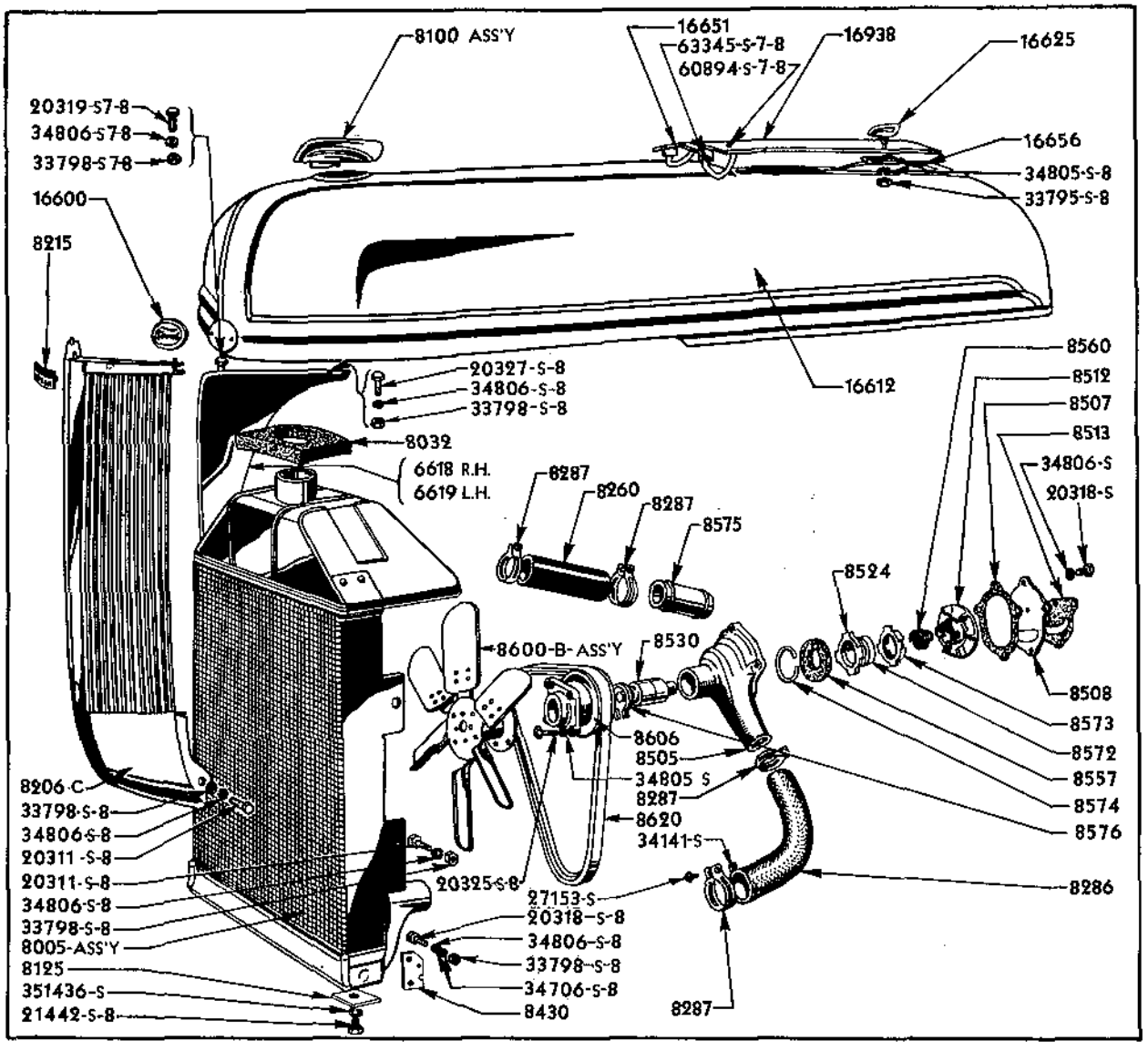

WATER PUMP (CONT'D)

9N-8513	$ .02	Gasket (Rear) - Water Pump	1	.....	9N	39-41
68-8524	.10	Seal - Water Pump	1	.....	9N	39-41
79-8530	2.50	Bearing Assy. - Water Pump	1	.....	9N	39-41
68-8557-A	.20	Washer - Water Pump	1	.....	9N	39-41
68-8560	.04	Spring - Water Pump	1	.....	9N	39-41
68-8572	.02	Ring (Clamp) - Water Pump	1	.....	9N	39-41
68-8573	.04	Guide (Spring) - Water Pump	1	.....	9N	39-41
68-8574	.01	Wire (Snap)	1	.....	9N	39-41
9N-8575-A	1.25	Thermostat Assy.	1	.....	9N	39-41
9N-8576	.05	Ring (Snap) - Water Pump Housing	1	.....	9N	39-41
9N-8600-A		Fan Assy.	1	Obsolete Service 9N-8600-B	9N	39-41
9N-8600-B	*1.75	Fan Assy. (6-Blade Pusher Type)	1	.....	9N	39-41
9N-8600-C		Fan Assy. (6 Blade Pull Type)	1	.....	9N	39-41
20325-S		Bolt (Hex Head) - Fan to Fan Pulley	4	.....	9N	39-41

* Not subject to regular discount.

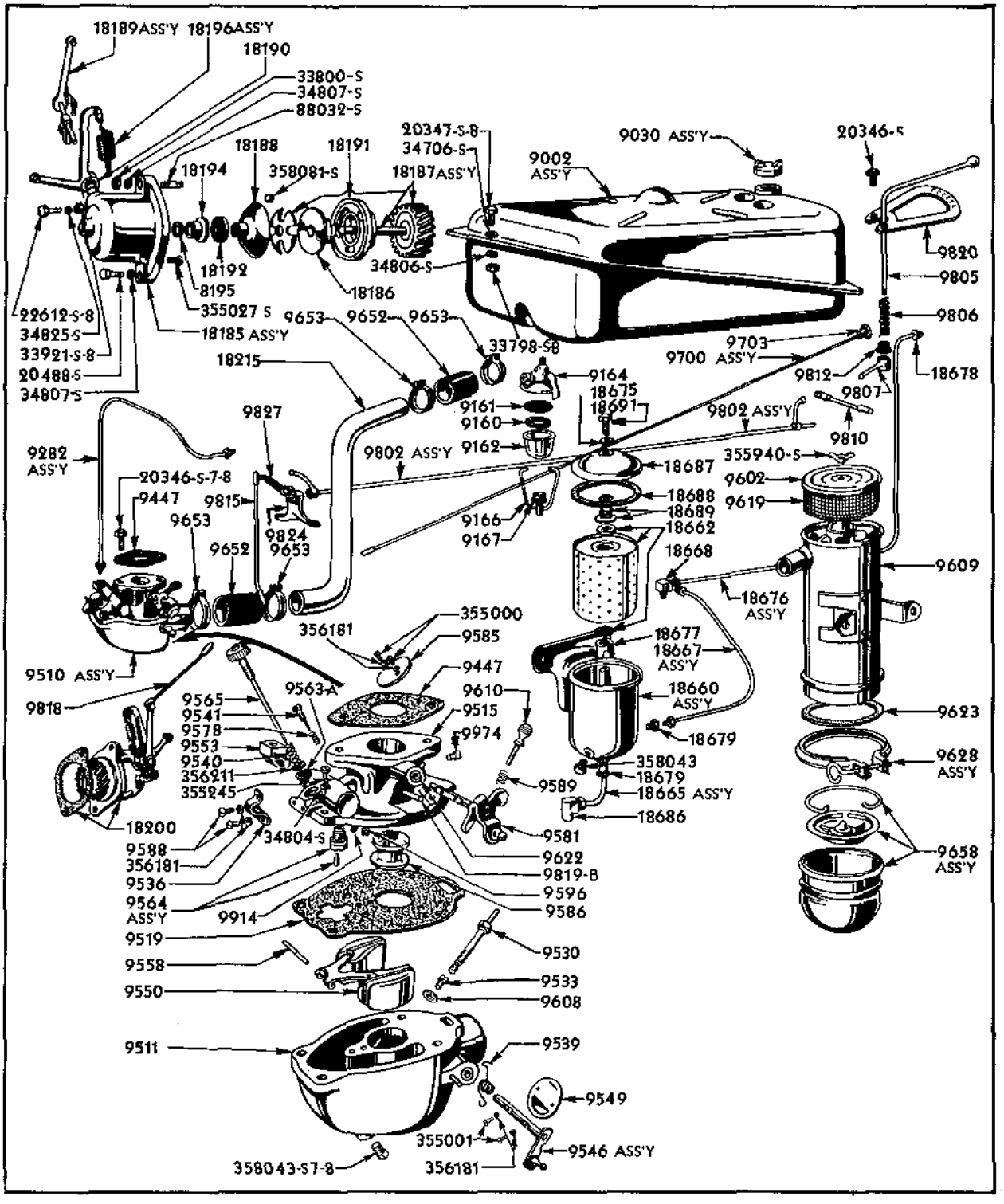
18189ASS'Y
18196ASS'Y
18190
33800-S
34807-S
88032-S
20347-S-8
34706-S
18188
18191
18194
358081-S
18187ASS'Y
9002 ASS'Y
9030 ASS'Y
20346-S
9820
9805
9806
18192
8195
18186
34806-S
22612-S-8
34825-S
33921-S-8
20488-S
34807-S
355027 S
18185 ASS'Y
9653
9652
9653
33798-S8
18215
9703
9700 ASS'Y
9812
9807
18678
9164
18675
18691
9161
9160
9162
9802 ASS'Y
9810
9827
9282 ASS'Y
9802 ASS'Y
355940-S
18687
9602
9619
20346-S-7-8
9447
9815
9653
9824
9653
9652
9166
9167
18688
18689
18662
18668
9609
18676 ASS'Y
355000
356181
9585
18677
18667 ASS'Y
9510 ASS'Y
9447
9818
9565
9541
9578
9553
9540
356211
355245
9563-A
9610
9515
9974
18660 ASS'Y
18679
9623
358043
18679
18665 ASS'Y
18686
9628 ASS'Y
9589
18200
34804-S
9581
9588
356181
9536
9564 ASS'Y
9914
9622
9819-B
9596
9586
9658 ASS'Y
9519
9530
9558
9533
9550
9608
9511
9539
9549
355001
9546 ASS'Y
358043-S7-8
356181

Part No.	Price	Part Name	Unit	Remarks	Type	Year
		WATER PUMP (CONT'D)				
34805-S		Washer (Lock) - Fan to Fan Pulley	4	.....	9N	39-41
9N-8606	$1.95	Pulley - Fan	1	.....	9N	39-41
52-8620-C	.90	Belt - Fan for A & B Generator	1	.....	9N	39-41
9N-8620-A	.90	Belt - Fan (Long, for C Generator)	1	.....	9N	39-40

FUEL SYSTEM

9N-9002-A	8.65	Fuel Tank Assy.	1	.....	9N	39-41
20347-S7-8		Bolt (Hex Head) - Fuel Tank to Fuel Tank Support	3	.....	9N	39-41
34706-S8		Washer (Flat) - Fuel Tank to Fuel Tank Support	3	.....	9N	39-41
34806-S8		Washer (Lock) - Fuel Tank to Fuel Tank Support	3	.....	9N	39-41
33798-S8		Nut (Hex) - Fuel Tank to Fuel Tank Support Bolt	3	.....	9N	39-41
9N-9030	.20	Cap Assy. - Fuel Tank Filler	2	.....	9N	39-41
9N-9067	.10	Pad - Fuel Tank Support	3	.....	9N	39-41
9N-9121	.12	Anti-Rattler - Fuel Line	1	.....	9N	39-41
9N-9126	1.95	Adaptor-Tank to Tank Support	1	.....	9N	39-41
9N-9155-A	1.80	Sediment Bulb Assy. - Radiator	1	.....	9N	39-41
9N-9160	.02	Gasket - Sediment Bulb	1	.....	9N	39-41
9N-9161	.10	Screen - Sediment Bulb	1	.....	9N	39-41
9N-9162	.12	Glass Bowl - Sediment Bulb	1	.....	9N	39-41
9N-9164-A	1.65	Valve Body Assy. - Sediment Bulb	1	.....	9N	39-41
356392-S		Washer - Valve Body Assy.	1	.....	9N	39-41
356390-S		Washer - Valve Body Assy.	1	.....	9N	39-41
357244		Cotter Pin - Valve Body Assy.....	1	.....	9N	39-41
9N-9166	.18	Hold Up Wire Assy. - Sediment Bulb	1	.....	9N	39-41
355755-S		Sediment Bulb Clamp and Cup Assy.	1	.....	9N	39-41
9N-9167	.12	Hold Up Nut - Sediment Bulb	1	.....	9N	39-41
9N-9273	1.45	Gauge Assy. - Oil Pressure	1	.....	9N	39-41
34079-S7-8		Nut (Hex) - Oil Pressure Gauge to Dash ..	2	.....	9N	39-41
34803-S7-8		Washer (Lock) - Oil Pressure Gauge to Dash.	2	.....	9N	39-41
9N-9282	.30	Fuel Line Assy.	1	.....	9N	39-41
91A-2133	.04	Nut - Fuel Line Assy.	2	.....	9N	39-41

MANIFOLD

9N-9425	4.70	Manifold - Intake and Exhaust	1	.....	9N	39-41
88403-S		Stud (Screw) - Exhaust Manifold	4	.....	9N	39-41
33816-S		Nut (Hex) - Exhaust Manifold Studs	4	.....	9N	39-41
351436-S7-8		Washer (Lock) - Manifold	4	.....	9N	39-41
9N-9447	.02	Gasket - Carburetor to Manifold	1	.....	9N	39-41
9N-9448	.05	Gasket - Intake and Exhaust Manifold	2	.....	9N	39-41

CARBURETOR

9N-9506		Throttle Body Assy. (Part Number changed to 9515)		.....	9N	
9N-9507		Carburetor Body and Plugs Assy. (Part Number changed to 9511)		.....	9N	
9N-9510	8.80	Carburetor Assy.	1	.....	9N	39-41
20356-S7-8		Bolt (Hex Head) - Manifold to Carburetor.	2	.....	9N	39-41
34806-S-8		Washer (Lock) - Manifold to Carburetor Bolt	2	.....	9N	39-41
9N-9447	.02	Gasket - Carburetor to Manifold	1	.....	9N	39-41
9N-9511	3.60	Bowl, Carburetor Assy. (Body and Plugs) .	1	.....	9N	39-41

* Not subject to regular discount.

Part No.	Price	Part Name	Unit	Remarks	Type	Year
		CARBURETOR (CONT'D)				
9N-9515		Gasket - (Between Upper and Lower Body) (Part Number changed to 9519)		.....	9N	39-41
9N-9515	$3.50	Throttle Body Assy.	1	.....	9N	39-41
34804-S2		Washer (Lock) - Bowl Cover to Body No. 12.	4	.....	9N	39-41
355245-S	.05	Screw - Bowl Cover to Body	4	.....	9N	39-41
9N-9519	.05	Gasket - Between Upper and Lower Body ...	1	.....	9N	39-41
9N-9530	.40	Nozzle - Carburetor (Main)	1	.....	9N	39-41
9N-9533	.20	Jet - Maximum Fuel Limiting	1	.....	9N	39-41
9N-9536	.15	Ratchet Assy. - Main Adjustment	1	.....	9N	39-41
356181-S		Washer (Lock) - Main Adjustment Ratchet Assy.	2	.....	9N	39-41
9N-9539	.15	Spring (Choke Return) - Carburetor	1	.....	9N	39-41
9N-9540	.10	Spring - Main Adjustment Needle	1	.....	9N	39-41
9N-9541	.25	Needle - Idling Adjusting	1	.....	9N	39-41
9N-9545		Choke Fly Assy.		Obsolete Service 9N-9549..	9N	
9N-9546	.45	Choke Lever and Shaft Assy.	1	.....	9N	39-41
9N-9549	.65	Choke Fly Assy.	1	.....	9N	39-41
356181-S		Washer (Lock) - Main Air Choke Plate	2	.....	9N	39-41
355001-S7-8		Screw (Machine) - Main Air Choke Plate ..	2	.....	9N	39-41
9N-9550	1.00	Float and Lever Assy.	1	.....	9N	39-41
9N-9553	.45	Strainer and Elbow Assy.	1	.....	9N	39-41
9N-9558	.05	Shaft - Carburetor Float Lever	1	.....	9N	39-41
9N-9563	.05	Gasket - Adjusting Needle Seat Plug	1	.....	9N	39-41
9N-9564	.95	Seat and Valve Assy. - Matched Float	1	.....	9N	39-41
9N-9565	.45	Needle Assy. - Main Adjustment	1	.....	9N	39-41
356211-S		Washer (Flat) - Main Adjustment Needle ..	1	.....	9N	39-41
9N-9578	.15	Spring - Idle Adjustment Needle	1	.....	9N	39-41
9N-9581	.60	Throttle Shaft and Lever Assy.	1	.....	9N	39-41
350164-S7-8		Screw (Adjusting) Throttle	1	.....	9N	39-41
9N-9585	.20	Throttle Fly - Carburetor	1	.....	9N	39-41
356181-S		Washer (Lock) - Carburetor Throttle Fly .	2	.....	9N	39-41
355000-S		Screw (Machine) - Carburetor Throttle Fly	2	.....	9N	39-41
9N-9586	.35	Venturi	1	.....	9N	39-41
355000-S-19		Screw - Carburetor Throttle Plate	2	.....	9N	39-41
9N-9588	.05	Screw - Carburetor Throttle Fly	2	.....	9N	39-41
9N-9589	.10	Spring - Throttle Lever Adjustment Screw.	1	.....	9N	39-41
9N-9591	.07	Retainer - Throttle Shaft Packing	1	.....	9N	39-41
9N-9596	.20	Jet - Idler	1	.....	9N	39-41
9N-9608	.05	Gasket - Pump Check Valve Screw	1	.....	9N	39-41
9N-9610	.10	Screw - Carburetor Throttle Adjustment ..	1	.....	9N	39-41
9N-9622	.05	Packing - Throttle Shaft	1	.....	9N	39-41
9N-9689		Packing - Choke Shaft	1	.....	9N	39-41
9N-9819-B	.01	Pin - Throttle Control Lever	1	.....	9N	39-41
9N-9914	.15	Jet - Economizer	1	.....	9N	39-41
355305-S		Screw (Headless) - Idle Drilling Plug ...	1	.....	9N	39-41
9N-18376	.20	Gasket Kit - Carburetor	1	.....	9N	39-41

AIR CLEANER

9N-9600-C1	7.35	Air Cleaner Assy. (Donaldson)	1	.....	9N	39-41
9N-9600-C2	7.35	Air Cleaner Assy. (U.S.)	1	.....	9N	39-41
21440-S7-8		Bolt (Hex Head) Air Cleaner Upper Steering Housing	2	.....	9N	39-41
351536-S7-8		Washer Lock Spl.	2	.....	9N	39-41
9N-9602-A		Cover Assy.-Air Cleaner (Used on dome type service for 9N-9600-A&B air cleaner)	1	.....	9N	39-41
9N-9602-C1	.70	Cover Assy. - Air Cleaner (Donaldson) ...	1	.....	9N	39-41
9N-9602-C2	.30	Cover Assy. - Air Cleaner (U.S.)	1	.....	9N	39-41

* Not subject to regular discount.

Part No.	Price	Part Name	Unit	Remarks	Type	Year
		AIR CLEANER (CONT'D)				
355940-S		Nut (Special Wing) - Air Cleaner Cover ..	1	.....	9N	39-41
9N-9609-C1	$ 5.30	Body Assy. - Air Cleaner (Donaldson)	1	.....	9N	39-41
9N-9609-C2	5.45	Body Assy. - Air Cleaner (U.S.)	1	.....	9N	39-41
9N-9619-C1	.25	Screen (Inner) - Air Cleaner (Donaldson) .	1	.....	9N	39-41
9N-9619-C2	.06	Screen (Inner) - Air Cleaner (U.S.)	1	.....	9N	39-41
9N-9623	.02	Gasket - Air Cleaner	1	.....	9N	39-41
9N-9628-C1	.70	Clamp Assy. - Air Cleaner (Donaldson) ...	1	.....	9N	39-41
9N-9628-C2	.30	Clamp Assy. - Air Cleaner (U.S.)	1	.....	9N	39-41
9N-9652	.10	Hose - Air Cleaner to Carburetor	2	.....	9N	39-41
9N-9653	.04	Clamp - Air Cleaner to Carburetor Hose ..	4	.....	9N	39-41
9N-9658-C1	1.55	Oil Cup Assy. - Air Cleaner (Donaldson) ..	1	.....	9N	39-41
9N-9658-C2	1.00	Oil Cup Assy. - Air Cleaner (U.S.)	1	.....	9N	39-41
9N-18215-A	1.30	Pipe - Air Cleaner to Carburetor	1	.....	9N	39-41
9N-18215-C	1.30	Pipe - Air Cleaner to Carburetor	1	.....	9N	39-41

THROTTLE CONTROLS

9N-9700-A	.18	Rod Assy. - Choke Control	1	.....	9N	39-41
9N-9703	.20	Knob - Choke	1	.....	9N	39-41
9N-9802	1.65	Shaft Assy. - Throttle Control	1	.....	9N	39-41
9N-9805	1.10	Rod - Throttle Control	1	.....	9N	39-41
9N-9806	.02	Spring - Throttle Control Rod	1	.....	9N	39-41
9N-9807	.40	Lever - Throttle Control (Short)	1	.....	9N	39-41
9N-9810	.12	Socket Assy. - Throttle Control Rod	1	.....	9N	39-41
9N-9812	.06	Retainer - Throttle Control Rod Spring ..	1	.....	9N	39-41
9N-9815-B	.30	Rod Assy. - Throttle Shaft to Governor ..	1	.....	9N	39-41
9N-9818-A	.07	Rod - Governor to Carburetor	1	.....	9N	39-41
9N-9820	.60	Quadrant - Throttle Control Rod	1	.....	9N	39-41
20346-S7-8		Bolt (Hex Head) - Throttle Control Quadrant to Upper Steering Gear Housing .	2	.....	9N	39-41
9N-9824	.06	Bracket - Throttle Control Shaft	1	.....	9N	39-41
9N-9827	.04	Governor Compensating Spring	1	.....	9N	39-41
9N-9828	.05	Pin - Throttle Control Shaft Bracket	1	.....	9N	39-41

GENERATOR

9N-10000-B		Generator Assy. (3-Brush Type)	1	Obsolete Service C	9N	39-41
20559-S		Bolt (Hex Head) - Generator to Engine ...	1	.....	9N	39-41
33846-S		Nut (Hex) - Generator to Engine Bracket Bolt	1	.....	9N	39-41
34809-S		Washer (Lock) - Generator to Engine Bracket Bolt	1	.....	9N	39-41
20887-S7-8		Bolt (Hex Head) - Generator to Engine ...	1	.....	9N	39-41
33792-S		Nut (Hex) - Generator to Engine Bracket Bolt	1	.....	9N	39-41
34808-S		Washer (Lock) - Generator to Engine Bracket Bolt	1	.....	9N	39-41
9N-10000-C	15.00	Generator Assy. (Heavy Duty)	1	After Trac. #	9N	39-41
20887-S7-8		Bolt - Generator to Engine	1	.....	9N	39-41
33792-S7-8		Nut - Generator to Engine Bolt	1	.....	9N	39-41
34808-S7-8		Washer - Generator to Engine Bolt.....	1	.....	9N	39-41
9N-10005-A	5.50	Armature Assy. - Generator	1	.....	9N	39-41
9N-10005-B	5.50	Armature Assy. - Generator	1	.....	9N	39-41
9N-10005-C	6.45	Armature Assy. - Generator	1	.....	9N	39-41
9N-10036	.06	Wire Assy. - Generator	1	.....	9N	39-41
31027-S7-8		Nut		.....	9N	39-41
34902-S		Washer		.....	9N	39-41

* Not subject to regular discount.

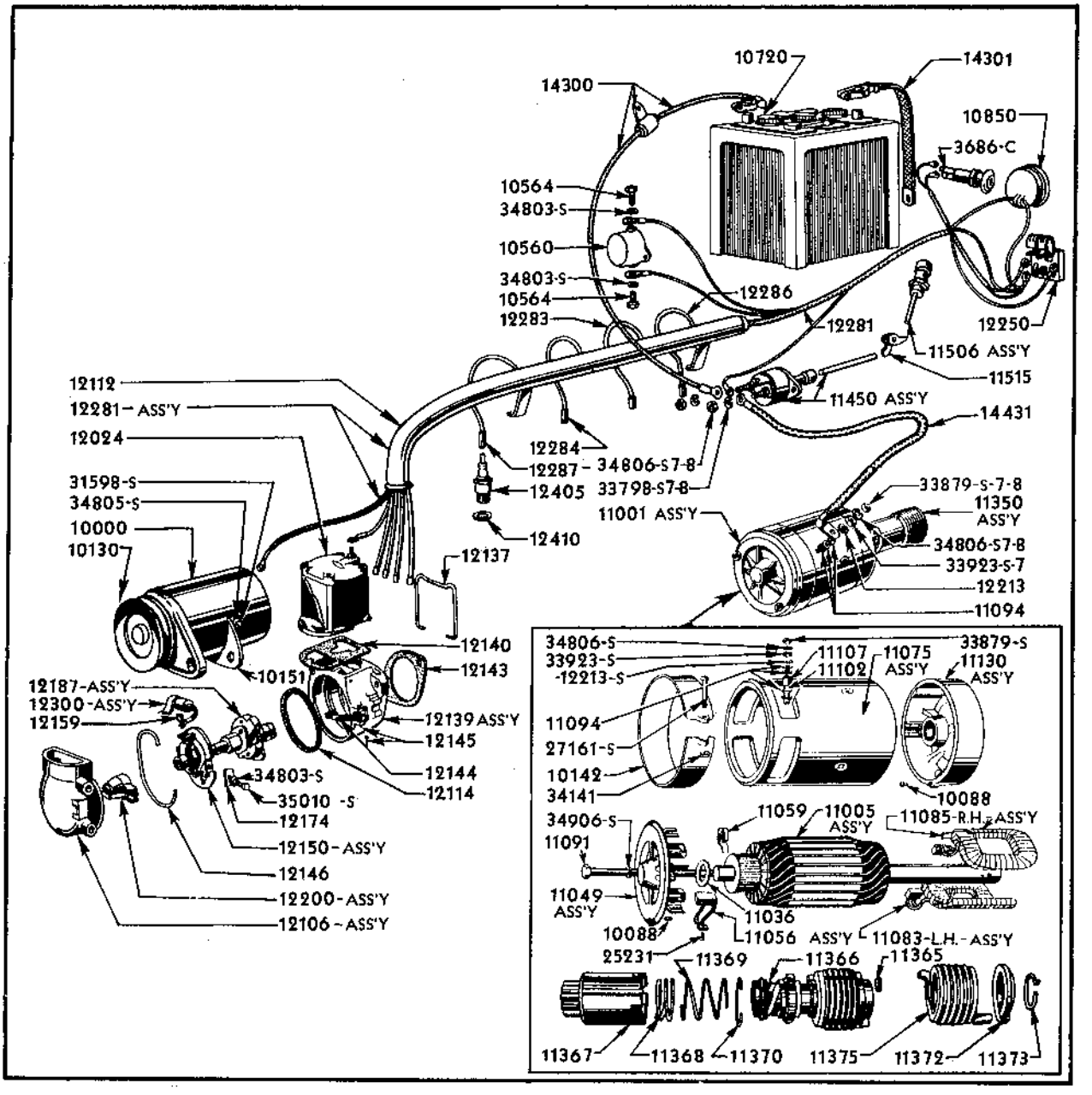
10720
14301
14300
10850
3686-C
10564
34803-S
10560
34803-S
10564
12283
12286
12281
12250
11506 ASS'Y
11515
11450 ASS'Y
14431
12112
12281-ASS'Y
12024
12284
12287-
34806-S7-8
33798-S7-8
12405
12410
31598-S
34805-S
10000
10130
11001 ASS'Y
33879-S-7-8
11350 ASS'Y
34806-S7-8
33923-S-7
12213
11094
12137
12140
12143
10151
12187-ASS'Y
12300-ASS'Y
12159
12139 ASS'Y
12145
12144
12114
34803-S
35010 -S
12174
12150-ASS'Y
12146
12200-ASS'Y
12106-ASS'Y
34806-S
33923-S
-12213-S
11107
11102
11075 ASS'Y
33879-S
11130 ASS'Y
11094
27161-S
10142
34141
10088
34906-S
11091
11059
11005 ASS'Y
11085-R.H.-ASS'Y
11049 ASS'Y
10088
11036
11056 ASS'Y
11083-L.H.-ASS'Y
25231
11369
11366
11365
11367
11368
11370
11375
11372
11373

Part No.	Price	Part Name	Unit	Remarks	Type	Year
		GENERATOR (CONT'D)				
9N-10044	$ .01	Screw - Pole Piece	2		9N	39-41
68-10044	.01	Screw - Pole Piece	2		9N	39-41
9N-10050-A	1.65	End Plate Assy. - Generator	1		9N	39-41
9N-10050-B	2.00	End Plate Assy. - Generator	1		9N	39-41
31588-S7-8		Screw (Fillister Head) - Generator Brush Terminal to End Plate No. 10	1		9N	39-41
34823-S2		Washer (Lock) - Generator Brush Terminal to End Plate Screw No. 10	1		9N	39-41
40-10051	.02	Brush Holder - Generator	3		9N	39-41
9N-10057	.04	Spring - Generator Brush	3		9N	39-41
40-10057	.02	Spring - Brush Holder	3		9N	39-41
9N-10069-A	.25	Fixed Brush and Terminal Wire Assy. - Generator	3		9N	39-41
9N-10069-B	.25	Brush and Terminal Wire Assy. - Generator	3		9N	39-41
355025-S7-8		Screw - Generator Brush Terminal	3		9N	39-41
40-10069	.10	Brush - Generator	2		9N	39-41
40-10070	.07	Brush - Generator (adj.)	1		9N	39-41
31061-S8		Nut			9N	39-41
34902-S		Washer			9N	39-41
18-10088	.01	Dowel - Generator and Starter Frame	2		9N	39-41
9N-10096-A	.01	Ring - Generator Pulley Retaining	1		9N	39-41
9N-10096-B	.01	Ring - Generator Pulley Retaining	1		9N	39-41
9N-10120	.05	Bolt (Through) - Generator	2		9N	39-41
34803-S		Washer (Lock) - Generator End Plate and Frame Assembly No. 10	2		9N	39-41
18-10120-A	.04	Bolt - Generator (through)	2		9N	39-41
34803-S2		Lock Washer	2		9N	39-41
9N-10129-B	1.45	Generator Brush End Plate Assembly	1		9N	39-41
9N-10130-B	1.50	Pulley - Generator (For C Generator)	1		9N	39-41
9N-10130-C	1.40	Pulley - Generator (For A Generator)	1		9N	39-41
9N-10130-D	1.40	Pulley - Generator (For B Generator)	1		9N	39-40
351080-S		Nut - Generator Pulley	1		9N	39-41
74142-S		Key (Woodruff) - Generator Pulley to Shaft	1		9N	39-41
9N-10138-A	2.20	Plate Assy. - Generator Front End	1		9N	39-41
9N-10138-B	2.45	Plate Assy. - Generator Front End	1		9N	39-41
9N-10138-C	2.60	Plate Assy. - Generator Front End	1		9N	39-41
B-10141	.04	Cup - Generator Oil	1		9N	39-41
18-10146	.01	Retainer - Wick	1		9N	39-41
9N-10147	.02	Wick - Generator Brush End Plate	1		9N	39-41
9N-10151-A	.07	Support - Generator	1		9N	39-41
9N-10151-B	.12	Support - Generator	1		9N	39-41
31598-S		Screw - Bracket to Generator Frame	2		9N	39-41
34805-S		Washer (Lock) Bracket to Generator Frame Screw No. 10	2		9N	39-41
9N-10151-C	.12	Support - Generator	1		9N	39-41
20305-S2		Bolt - Generator Support			9N	39-41
34805-S		Washer - Generator Support	2		9N	39-41
9N-10175-A	1.60	Field Coil Assy. - Generator	1		9N	39-41
9N-10175-B	1.60	Field Coil Assy. - Generator	1		9N	39-41
9N-10175-C	1.80	Field Coil Assy. - Generator	1		9N	39-41
9N-10208		Insulator - Terminal Inner	1		9N	39-41
81A-10211	.01	Screw - Generator Terminal No. 10-32	1		9N	39-41
34703-S7-8		Washer (Flat) - Generator Terminal Screw No. 10	1		9N	39-41
34079-S7-8		Nut (Hex) - Generator Terminal Screw	2		9N	39-41
34803-S		Washer (Lock) - Generator Terminal Screw No. 10	1		9N	39-41
9N-10211	.02	Screw - Generator Terminal	1		9N	39-41
351253-S7-8		Washer (Flat) - Generator Terminal Screw No. 10	1		9N	39-41
34079-S7-8		Nut (Hex) - Generator Terminal Screw	2		9N	39-41

* Not subject to regular discount.

Part No.	Price	Part Name	Unit	Remarks	Type	Year
		GENERATOR (CONT'D)				
34803-S		Washer (Lock) - Generator Terminal Screw No. 10	1		9N	39-41
9N-10505-A	$ 4.25	Regulator - (Voltage) Generator	1		9N	39-41
9N-10505-B	1.40	Cut Out Assy. - Generator Use 01A-10505	1		9N	39-41
20306-S7-8		Bolt (Hex Head) Cut Out to Dash	2		9N	39-41
34806-S7-8		Washer - Lock	2		9N	39-41

BATTERY

(See Illustration on Page 33)

9N-10597	.30	Cutout Plate	1		9N	39-41
27058-S7-8		Screw	1		9N	
34803-S7-8		Lock Washer	1		9N	
340790-S7-8		Nut	1		9N	39-41
20311-S7-8		Bolt	2		9N	39-41
33798-S7-8		Nut	2		9N	39-41
34806-S7-8		Washer	2		9N	39-41
9N-10655-A	*8.75	Battery Assy. - 13 Plate	1		9N	39-41
81A-10720	.07	Plug (Filler) - Battery	3		9N	39-41
9N-10724	.25	Strap Assy. (Hold Down) Battery	1		9N	39-41
9N-10726	.06	Insulator - Battery Hold Down Strap	1		9N	39-41
9N-10728	.18	Side Piece - Battery Hold Down Strap	2		9N	39-41
34171-S7-8		Nut (Blind) - Battery Hold Down Strap to Dash	2		9N	39-41
34746-S		Washer (Flat) - Battery Hold Down Strap to Dash	2		9N	39-41
9N-10737	.65	Plate - Battery Cover	1		9N	39-41

AMMETER

(See Illustration on Page 16)

9N-10850-A		Ammeter Assy.	1	Obsolete Service B	9N	39-41
9N-10850-B	1.40	Ammeter Assy.	1		9N	39-41
350860-S		Nut (Hex Brass) - Ammeter to Rear Bolt No. 10	2		9N	39-41

STARTER AND DRIVE

(See Illustration on Page 33)

9N-11001	14.25	Starter and Drive Assy.	1		9N	39-41
9N-11002	10.00	Starter Assy. (Only)	1		9N	39-41
18-10142	.05	Band - Starter Cover	1		9N	39-41
27161-S		Screw (Round Head Machine) - Starter Cover Band	1		9N	39-41
34141-S		Nut (Square) - Starter Cover Band Screw No. 10-32	1		9N	39-41
52-11005	3.50	Armature Assy. - Starter	1		9N	39-41
18-11036	.01	Washer (Thrust) - Starter Armature	2		9N	39-41
18-11049	.65	End Plate Assy. - Starter Brush	1		9N	39-41
18-11056	.15	Brush Assy. Starter (Grounded)	2		9N	39-41
25231-S7-8		Screw (Fillister Head Machine) - Starter Brush Assy. to Frame	2		9N	39-41
B-11059	.03	Spring - Starter Brush	4		9N	39-41
18-11083	.65	Field Coil - Starter L.H.	1		9N	39-41
18-11085	.65	Field Coil - Starter R.H.	1		9N	39-41
18-11091	.03	Bolt (Through) Starter	2		9N	39-41

* Not subject to regular discount.

Part No.	Price	Part Name	Unit	Remarks	Type	Year
		STARTER AND DRIVE (CONT'D)				
34906-S2		Washer (Internal Tooth) Starter through Bolt	2		9N	39-41
18-11094	$ .01	Washer - Starter Field Terminal	3		9N	39-41
18-11102	.05	Terminal - Starter Field	1		9N	39-41
34806-S7-8		Washer (Lock)-Starter Field Terminal Post	1		9N	39-41
33923-S7		Nut (Hex) - Starter Field Terminal Check Nut	1		9N	39-41
33879-S7		Nut (Hex) - Starter Field Terminal Post	1		9N	39-41
18-11107	.03	Bushing - Starter Terminal	1		9N	39-41
52-11130	.85	Plate Assy. - Starter (Rear End)	1		9N	39-41
52A-11140-B	.02	Bracket - Starter to Oil Pan	1		9N	39-41
52-11350-C	3.50	Drive Assy. - Starter	1		9N	39-41
52-11365-B	.02	Pin - Pinion	1		9N	39-41
52-11366-B	2.55	Shaft - Drive Screw	1		9N	39-41
52-11367	1.90	Pinion and Barrel Drive	1		9N	39-41
52-11368	.20	Spring - mashing	1		9N	39-41
52-11369	.12	Spring - Anti Drift	1		9N	39-41
52-11370	.03	Ring - Pinion and Barrel Retainer	1		9N	39-41
52-11372	.25	Plate - Anchor Spring	1		9N	39-41
52-11373	.05	Ring (Lock) - Spring	1		9N	39-41
52-11375	.60	Spring - Starter Drive	1		9N	39-41
9N-11450-A	.70	Switch - Starter Assy. (In Dash)	1		9N	39-41
9N-11450-B	1.25	Switch - Starter Assy. (Foot Control)	1		9N	39-41
9N-11467	.02	Gasket - Starting Switch	1		9N	39-41
20310-S7-8		Bolt (Hex Head) - Starter Button	2		9N	39-41
33798-S2		Nut (Hex) - Starter Switch Assy.	2		9N	39-41
34806-S		Washer (Lock) - Starter Switch to Steering Gear Housing	2		9N	39-41
9N-11500	.18	Knob - Starter Switch (Rubber)	1		9N	39-41
9N-11506	.70	Starter Button Assy.	1		9N	39-41
9N-11511	.06	Rod - Starter Push Lever	1		9N	39-41
9N-11512	.25	Rod - Starter Push	1		9N	39-41
72009-S		Pin - (Cotter) Starter Button to Starter Switch Push Rod	1		9N	39-41
9N-11515	1.30	Lever - Starter Push	1		9N	39-41
9N-11652	.85	Switch Assy. - Lighting With Connector Wires	1		9N	39-41
9N-11653-B	2.70	Wiring Assy. - Lighting - Less Switch	1		9N	39-41
9N-11664	.06	Plug (Rubber) - Dash	1		9N	39-41

DISTRIBUTOR AND COIL

(See Illustration on Page 33)

9N-12000	14.75	Distributor and Coil Assy.	1		9N	39-41
20376-S7-8		Bolt (Hex Head) Distributor to Engine Front Cover	2		9N	39-41
34806-S7-8		Washer, Lock	2		9N	39-41
9N-12024	3.60	Ignition Coil Assy.	1		9N	39-41
350830-S7-8		Nut, Ignition primary post	1		9N	39-41
9N-12100	11.25	Distributor Assy. Less Coil	1		9N	39-41
9N-12106	2.30	Housing Assy. - Distributor Terminal (Cap)	1		9N	39-41
9N-12112	1.25	Conduit - Spark Plug Wires	1		9N	39-41
9N-12113	.05	Grommet (Seal) - Spark Plug Wire	4		9N	39-41
91A-12114	.03	Gasket - Distributor Terminal Housing	1		9N	39-41
9N-12137	.03	Bail - Distributor Coil	1		9N	39-41
9N-12139	2.00	Distributor Base and Clamp Assy.	1		9N	39-41
91A-12140	.08	Gasket - Distributor Coil	1		9N	39-41
9N-12143	.02	Gasket - Distributor Base	1		9N	39-41
9N-12144*	.02	Clamp - Distributor Terminal Housing	2		9N	39-41
B-12145	.01	Rivet - Distributor Cap Clamp	2		9N	39-41

* Not subject to regular discount.

Part No.	Price	Part Name	Unit	Remarks	Type	Year
		DISTRIBUTOR AND COIL (CONT'D)				
91A-12146	$ .03	Spring - Distributor Base	1		9N	39-41
9N-12147	.18	Dist. Vent Cap Assy.	2		9N	39-41
48-12148	.01	Screw - Distributor to Front Cover	2		9N	39-41
9N-12150	2.85	Breaker Assy. - Distributor	1		9N	39-41
9N-12151	2.00	Dist. Bracket Plate Assy.	1		9N	39-41
91A-12159	.02	Screw (Primary) Contact Distributor	1		9N	39-41
9N-12162	.60	Arm Distributor breaker	1		9N	39-41
91A-12174	.02	Washer - Dist. Breaker Plate Screw	1		9N	39-41
34803-S		Washer (Lock) - Distributor Breaker Plate Bolt	1		9N	39-41
350101-S7-8		Bolt - Dist. Breaker Plate	1		9N	39-41
9N-12187	3.50	Shaft Cam and Weights Assy. Distributor	1		9N	39-41
91A-12200	.45	Rotor Assy. - Distributor	1		9N	39-41
B-12213	.01	Washer - Dist. Cam Screw	1		9N	39-41
68-12219	.25	Bracket Assy. - Dist. Contact	1		9N	39-41
68-12230	.03	Dist. Bracket Lock Screw	1		9N	39-41
9N-12250-B	.40	Resistor	1		9N	39-41
9N-12281-A	3.90	Conduit and Wiring Assy.	1		9N	39-41
9N-12281-B	4.55	Conduit and Wiring Assy.	1		9N	39-41
9N-12281-C	4.50	Conduit and Wiring Assy.	1		9N	39-41
9N-12281-D	4.50	Conduit and Wiring Assy. (Use 9N-13603 Wire to Indicator Lamp)	1		9N	39-41
9N-12281-E	4.35	Conduit and Wiring Assy.	1			
9N-12283	.20	Wire (Cylinder No. 3) - Dist. to Spark Plug	1		9N	39-41
9N-12284	.20	Wire (Cylinder No. 2) - Dist. to Spark Plug	1		9N	39-41
9N-12286	.25	Wire (Cylinder No. 4) - Dist. to Spark Plug	1		9N	39-41
9N-12287	.20	Wire (Cylinder No. 1) - Dist. to Spark Plug	1		9N	39-41
91A-12300	.35	Condenser Assy.	1		9N	39-41
31032-S7		Screw - Condenser to Dist. Body	1		9N	39-41
34802-S7		Washer (Lock) - Condenser to Dist. Body Screw	1		9N	39-41
9N-12405	.65 (Lots of 4 - .59)	Spark Plug Assy.	4		9N	39-41
52-12410	.01	Gasket - Spark Plug	4		9N	39-41

WIRING

(See Illustration on Page 33)

9N-13603	.30	Wire - Conduit to Indicator Lamp (Use With 9N-12281-D)	1		9N	39-41
9N-14300-A	.45	Cable Assy. - Battery to Switch	1		9N	39-41
9N-14300-B		Cable Assy. - Battery to Switch	1	Obsolete Service C	9N	39-41
9N-14300-C	1.20	Cable Assy. - Battery to Switch	1		9N	39-41
9N-14301	.60	Connector Assy. - Battery to Ground	1		9N	39-41
23017-S16		Bolt (Hex Head) - Battery Connection	2		9N	39-41
33797-S16		Nut (Hex) - Battery Connection	2		9N	39-41
9N-14377	.10	Connector Assy.	1		9N	39-41
9N-14431-A	.90	Cable Assy. - Starter Switch to Starter	1		9N	39-41
9N-14431-B	.60	Cable Assy. - Starter Switch to Starter	1		9N	39-41
51-14550	.10	Switch to Starter Cable Support Assy.	1		9N	39-41
9N-14564	.07	Bracket - Spark Plug Wire	1		9N	39-41
B-14585	.02	Clip			9N	39-41
B-14586	.01	Clip			9N	39-41
9N-2279	.05	Clip, Wiring, Right Side Ignition Switch.	1		9N	39-41

*Not subject to regular discount.

Part No.	Price	Part Name	Unit	Remarks	Type	Year
		FENDER				
9N-16312	$8.35	Fender Assy.	2		9N	39-41
21191-S7-8		Bolt (Hex Head) - Fender Bracket to Rear Axle Housing	4		9N	39-41
33806-S7-8		Nut (Hex) - Rear Fender Bracket to Rear Axle	4		9N	39-41
351505-S7-8-18		Washer (Flat) - Fender to Rear Axle Housing	4		9N	39-41

HOOD ASSEMBLY

(See Illustration on Page 28)

9N-16600	.35	Ornament - Hood	1		9N	39-41
33795-S8		Nut (Hex) - Name Plate to Hood Top	1		9N	39-41
350835-S8		Nut (Speed) - Name Plate to Hood Top	1		9N	39-41
9N-16612-B	32.50	Top Assy. - Hood (Painted)	1		9N	39-41
9N-16612-C	32.50	Top Assy. - Hood (Painted)	1		9N	39-41
350472-S8		Bolt (Special Carriage) - Instrument Panel to Hood Top	4		9N	39-41
33798-S7-8		Nut - (Hex) - Instrument Panel to Hood Top Bolt	4		9N	39-41
34806-S7-8		Washer - Lock - Instrument Panel to Hood Top Bolt	4		9N	39-41
9N-16618	1.50	Panel Assy. (Side) - Hood (R.H.)	1		9N	39-41
9N-16619	1.50	Panel Assy. (Side) - Hood (L.H.)	1		9N	39-41
20318-S8		Bolt (Hex Head) - Hood Side to Radiator Grille Lower Support	4		9N	39-41
34806-S8		Washer (Lock) - Hood Side to Support Bolt	4		9N	39-41
20311-S7-8		Bolt (Hex Head) - Hood Top to Hood Side Rear	2		9N	39-41
20319-S7-8		Bolt (Hex Head) Hood Side Panel Front to Hood	2		9N	39-41
33798-S8		Nut (Hex) - Hood Top to Hood Side Bolt	4		9N	39-41
34806-S8		Washer (Lock) - Hood Top to Hood Side	4		9N	39-41
20311-S7-8		Bolt (Hex Head) - Hood Side to Support Lower Bracket	2		9N	39-41
34806-S8		Washer (Lock) - Hood Side to Support Radiator Bracket Bolt	2		9N	39-41
33798-S7-8		Nut (Hex) - Hood Side to Support Lower Bracket Bolt	2		9N	39-41
9N-16625	.60	Stud and Handle - Hood Top Battery	1		9N	39-41
33795-S8		Nut (Hex) - Hood Top Battery Cover Handle Stud	1		9N	39-41
34805-S8		Washer (Lock) - Hood Top Battery Cover Handle Stud	1		9N	39-41
9N-16651	.12	Retainer - Hood Top Battery Cover Hinge	1		9N	39-41
63345-S		Rivet (Oval Head) - Hood Top Battery Cover Hinge Retainer to Hinge	2		9N	39-41
9N-16656	.50	Tongue - Hood Top Battery Cover	1		9N	39-41
9N-16689	.30	Hinge - Hood Top Battery Cover	1		9N	39-41
60894-S8		Rivet (Oval Head) - Hood Top Battery Cover to Hinge	4		9N	39-41
9N-16938-B	1.40	Cover Assy. - Hood Top Battery	1		9N	39-41
9N-16938-C	.60	Cover Assy. - Hood Top Battery	1		9N	39-41
9N-16938-D	.65	Cover Assy. - Hood Top Battery (Use with "C" Hood when repl. "A" and "B" Hoods)	1		9N	39-41
9N-16942-C	.40	Cover - Hood Top Battery	1		9N	39-41
9N-16948-B	.02	Spring - Battery Opening Cover	4		9N	39-41
60882-S		Rivet - Battery Cover Spring	8		9N	39-41

* Not subject to regular discount.

Part No.	Price	Part Name	Unit	Remarks	Type	Year
		TOOL BOX AND TOOLS				
9N-17004	$ 4.30	Tool Kit	1		9N	39-41
B-17005-A	.20	Tool Bag	1		9N	39-41
9N-17005	2.15	Tool Box Assy.	1		9N	39-41
21440-S7-8		Bolt (Hex Head) - Tool Box to Upper Housing	2		9N	39-41
351436-S7-8		Washer (Lock) - Tool Box	2		9N	39-41
9N-17014	.75	Wrench (Open End-Hex)	1		9N	39-41
O1A-17015	.20	Wrench (Open End-Hex)	1		9N	39-41
O1A-17016	.20	Wrench (Open End-Hex)	1		9N	39-41
O1A-17017-B	.45	Wrench - Spark Plug and Cylinder Head Nut	1		9N	39-41
B-17020	.20	Screw Driver	1		9N	39-41
O1A-17021	.45	Wrench - Monkey	1		9N	39-41
B-17025-A	.30	Pliers Assy.	1		9N	39-41
9N-17040	.60	Crank - Starting	1		9N	39-41
9N-17049	8.90	Cover - Tractor	1		9N	39-41
9N-17052	**4.25	Tire Pump	1		9N	39-41
9N-17065	*2.00	Adapter - Assy. Tire Pump Spark Plug	1		9N	39-41
9N-17078	3.75	Jack and Handle Assy.	1		9N	39-41
9N-17080	3.40	Jack	1		9N	39-41
9N-17081	.35	Handle - Jack	1		9N	39-41
9N-17125-B	1.15	Grease Gun	1		9N	39-41
9N-17667	.12	Clip - Wiring	1		9N	39-41
9N-17668	.06	Clip - Wiring	1		9N	39-41

GOVERNOR

(See Illustration on Page 29)

9N-18200-B	16.25	Governor Assy.	1		9N	39-41
20488-S		Bolt (Hex Head) - Governor to Side Cover.	1		9N	39-41
88032-S		Stud (Screw) - Governor to Side Cover	1		9N	39-41
33800-S		Nut (Hex) - Governor to Side Cover	1		9N	39-41
34807-S		Washer (Lock) - Governor to Side Cover	2		9N	39-41
9N-18185	4.25	Body Assy. - Governor	1		9N	39-41
9N-18186	2.30	Lower Race Assy. - Governor	1		9N	39-41
9N-18187	2.60	Drive Shaft Assy. - Governor	1		9N	39-41
9N-18188	.50	Upper Race Assy. - Governor	1		9N	39-41
9N-18189	1.55	Lever Assy. - Governor	1		9N	39-41
9N-18190	1.05	Manual Lever Assy. - Governor	1		9N	39-41
22612-S8		Screw - Adjusting	1		9N	39-41
33921-S8		Nut - Adjusting Screw	1		9N	39-41
34825-S8		Washer (Lock) - Adjusting Screw	1		9N	39-41
9N-18191	.90	Base - Governor	1		9N	39-41
9N-18192	.30	Bearing - (Thrust) - Governor Base	1		9N	39-41
9N-18194	.30	Base (Fork) - Governor	1		9N	39-41
9N-18195	.02	Clip - Governor Shaft	1		9N	39-41
9N-18196	.30	Spring - Governor Base	1		9N	39-41
9N-18241	.01	Shim - Ball Stop	As Req.		9N	39-41
355027-S		Screw - Governor Body	2		9N	39-41
356430-S		Washer - Ball Stop	1		9N	39-41
358081-S		Ball - Governor Base	4		9N	39-41
356490-S		Spacer, Governor Drive Shaft	1		9N	39-41
357408-S		Pin, Governing Lever Link	1		9N	39-41
357499-S		Pin, Manual Lever Link	1		9N	39-41

OIL FILTER

(See Illustration on Page 29)

9N-18658	1.95	Oil Filter Assy.	1		9N	39-41
358043-S7-8		Plug - Oil Filter	1		9N	39-41

* Not subject to regular discount.
**See Bulletin for special price.

Part No.	Price	Part Name	Unit	Remarks	Type	Year
		OIL FILTER (CONT'D)				
20348-S7-8		Bolt (Hex Head) - Oil Filter to Upper Housing	2		9N	39-41
351436-S7-8		Washer (Lock) - Oil Filter	2		9N	39-41
9N-18662	$ 1.00	Element - Oil Filter	1		9N	39-41
9N-18665	.30	Tube - Oil Filter Outlet	1		9N	39-41
9N-18667	.25	Tube - Oil Filter Inlet	1		9N	39-41
91A-2133	.03	Nut - Oil Filter Inlet Tube	2		9N	39-41
9N-18668	.18	Elbow - Filter and Gauge to Block	1		9N	39-41
O1A-18675	.03	Washer - Cover Hold Down Bolt	1		9N	39-41
9N-18676	.30	Tube - Oil Pressure Gauge	1		9N	39-41
9N-18677	.25	Oil Filter Cartridge Spacer	2		9N	39-41
9N-18679	.06	Adapter - Oil Filter Tube	3		9N	39-41
9N-18685	.06	Adapter - Oil Gauge Tube	1		9N	39-41
9N-18686	.10	Elbow - Oil Filter	1		9N	39-41
9N-18687	1.80	Cover - Oil Filter	1		9N	39-41
9N-18688	.18	Gasket - Oil Filter Cover	1		9N	39-41
O1A-18689	.20	Spring and Washer (Hold Down) - Element	1		9N	39-41
O1A-18691-A	.30	Bolt - Oil Filter Cover	1		9N	39-41

HEAD LAMP

9N-11652	.85	Switch Assy. - Lighting with Connector Wires Assy.	1		9N	39-41
9N-11653-B	2.70	Wiring - Lighting Assy. (Less Switch)	1		9N	39-41
9N-13002	4.55	Head Lamp Assy. R. H.	1		9N	39-41
9N-13003	4.55	Head Lamp Assy. L. H.	1		9N	39-41
356803-S7-8		Nut (Hex) - Head Lamp Assy.	2		9N	39-41
34809-S7-8		Washer (Lock) - Head-Lamp Assy.	2		9N	39-41
9N-13007	.27	Bulb (32 C. P. 6-8 Volt) - Head Lamp	2		9N	39-41
9N-13045	.85	Door - Head Lamp Assy.	2		9N	39-41
9N-13060	.75	Lens - Head Lamp	2		9N	39-41
9N-13061	.07	Spring - Head Lamp Lens Assy.			9N	39-41
9N-13102	.30	Reinforcement - Medallion	2		9N	39-41
9N-13404	.60	Lamp and Bracket Assy. - Rear	1		9N	39-41
33792-S4		Nut (Hex) - Tail Lamp Bracket	1		9N	39-41
34808-S4		Washer (Lock) - Tail Lamp Bracket	1		9N	39-41
9N-13445	.25	Lens (White) - Tail Lamp License Plate	1		9N	39-41
9N-13448	.40	Door - Rear Lamp	1		9N	39-41
9N-13450	.35	Lens (Red) - Rear Lamp	1		9N	39-41
B-13466	**.07	Bulb (6 Volt 3 C.P.) - Indicator Lamp	1		9N	39-41
9N-13468	.65	Bracket - Tail Lamp Support	1		9N	39-41
9N-13470	.35	Bracket - Fender Lamp R.H.	1		9N	39-41
9N-13471	.35	Bracket - Fender Lamp L.H.	1		9N	39-41
9N-13472	.65	Bracket - Lamp Mounting R.H.	1		9N	39-41
9N-13473	.65	Bracket - Lamp Mounting L.H.	1		9N	39-41
9N-14487		Connector - Assy. - Wire	4		9N	39-41

ACCESSORIES

9N-1170-A	*97.50	Extra Rear Wheel and Tire (Set) 8 x 32	1		9N	39-41
9N-1170-B	*145.00	Extra Rear Wheel and Tire (Set) 10 x 32	1		9N	39-41
9N-1170-D	*96.00	Extra - Rear Wheel and Tire set (Steel)	1		9N	39-41
	2.25	Paint - Tractor Gray (1/2 gal.)			9N	39-41
M-2888	3.65	Paint - Tractor Gray (1 gal.)			9N	39-41
	17.50	Paint - Tractor Gray (5 gals.)			9N	39-41
9N-17049	8.90	Cover - Tractor	1		9N	39-41
9N-18438	14.50	Kit - Lighting	1		9N	39-41

* Not subject to regular discount.
**See Bulletin for special price.

STANDARD PARTS

Part No.	Price	Part Name
20306-S7	$ .02 1.35-C	5/16-18 x 7/16 Hex Head Bolt
20310-S7	.01 .80-C	5/16-18 x 1/2 Hex Head Bolt
20311-S7	.01 .80-C	5/16-24 x 1/2 Hex Head Bolt
20318-S7	.01 .75-C	5/16-18 x 9/16 Hex Head Bolt
20319-S7	.02 1.15-C	5/16-24 x 9/16 Hex Head Bolt
20325-S7	.02 1.10-C	1/4-28 x 5/8 Hex Head Bolt
20346-S7	.01 .90-C	5/16-18 x 3/4 Hex Head Bolt
20347-S7	.01 .80-C	5/16-24 x 3/4 Hex Head Bolt
20348-S7	.02 1.25-C	3/8-16 x 3/4 Hex Head Bolt
20348-S	.02 1.20-C	3/8-16 x 3/4 Hex Head Bolt
20356-S7	.01 .75-C	5/16-18 x 13/16 Hex Head Bolt
20366-S2	.01 .90-C	5/16-18 x 7/8 Hex Head Bolt
20368-S7	.02 1.30-C	3/8-16 x 7/8 Hex Head Bolt
20376-S7	.01 .75-C	5/16-18 x 15/16 Hex Head Bolt
20386-S2	.01 .85-C	5/16-18 x 1 Hex Head Bolt
20388-S7	.02 1.35-C	3/8-16 x 1 Hex Head Bolt
20388-S2	.02 1.30-C	3/8-16 x 1 Hex Head Bolt
20389-S7	.02 1.50	3/8-24 x 1 Hex Head Bolt
20408-S7	.02 1.45-C	3/8-16 x 1 Hex Head Bolt
20426-S7	.01 .95-C	5/16-18 x 1-1/4 Hex Head Bolt
20488-S7	.02 1.50-C	3/8-16 x 1-5/8 Hex Head Bolt
20672-S	.04 3.10-C	9/16-12 x 1-1/4 Hex Head Bolt
20873-S7	.07 1.10-XX	7/16-20 x 1.06 Hex Head Bolt
20874-S7	.03 2.60-C	7/16-20 x .68 Hex Head Bolt
20876-S7	.07 1.10-XX	7/16-20 x .88 Hex Head Bolt
20878-S7	.05 4.00-C	7/16-20 x 1.25 Hex Head Bolt
20880-S7	.04 3.00-C	7/16-20 x 1.575 Hex Head Bolt
20881-S7	.04 3.45-C	7/16-20 x 1.56 Hex Head Bolt
20882-S7	.04 3.40-C	7/16-20 x 1.375 Hex Head Bolt
20886-S7	.10 1.40-XX	7/16-20 x 3.32 Hex Head Bolt
20887-S7	$ .05 4.00-C	7/16-20 x 3 Hex Head Bolt
20889-S7	.10 1.80-XX	7/16-20 x 5 Hex Head Bolt
21182-S7	.20 1.80-X	5/8-18 x 2.875 Hex Head Bolt
21192-S7	.20 1.80-X	5/8-18 x 5.312 Hex Head Bolt
21440-S7	.03 2.30-C	7/16-14 x .75 Hex Head Bolt
21441-S7	.03 2.65	7/16-1.4 x 1.128 Hex Head Bolt
21442-S7	.04 3.00-C	7/16-14 x 1.38 Hex Head Bolt
21443-S7	.03 2.60-C	7/16-14 x .94 Hex Head Bolt
21444-S7	.04 3.00-C	7/16-14 x 1.38 Hex Head Bolt
21446-S7	.05 3.75-C	7/16-14 x 2.5 Hex Head Bolt
21447-S7	.03 2.75-C	7/16-14 x 1.5 Hex Head Bolt
21448-S7	.03 2.00-C	7/16-14 x 1.72 Hex Head Bolt
21449-S7	.06 .90-XX	7/16-14 x 3.625 Hex Head Bolt
21427-S7	.03 2.65-C	5/16-18 x 1-5/8 Hex Head Bolt
22228-S7	.05 4.00-C	5/16-24 x 1-1/4 Hex Head Bolt
22267-S2	.03 2.35-C	7/16-20 x 1-3/4 Hex Head Bolt
22503-S	.04 3.50-C	1/4-20 x 5/8 Hex Head Bolt
22612-S7	.05 4.00-C	1/4-28 x 3/4 Hex Head Bolt
23017-S16	.02 1.25-C	5/16-18 x 1-1/4 Hex Head Bolt
24327-S7	.01 .60	5/16-24 x 5/8 Hex Head Bolt
24642-S7	.01 .65-C	5/16-18 x 9/16 Flat Head Screw
25231-S7	.01 .60-C	No. 10-32 x 1/2 Flat Head Screw
25881-S7	.01 .60-C	No. 8-32 x 5/8 Brass Flat Head Screw
26456-S7	.01 .40-C	No. 6-32 x 1/4 Round Head Screw
27153-S7	.01 .55-C	No. 10-32 x 1-1/8 Round Head Screw
27161-S7	.01 .65-C	No. 10-32 x 1-1/4 Round Head Screw
31032-S7	.01 .35-C	No. 8-32 x 1/4 Fillibuster Head Screw
31588-S7	.01 .60-C	No. 10-32 x 5/16 Fillibuster Head Screw

STANDARD PARTS

Part No.	Price	Part Name
31598-S7	$ .01 .60-C	1/4-20 x 3/8 Fillibuster Head Bolt
33790-S7	.02 1.20-C	7/16-20 Hex Check Nut
33792-S7	.02 1.60-C	7/16-20 Hex Nut
33792-S18	.02 1.60-C	7/16-20 Nut Reg.Hex
33794-S7	.03 2.10-C	7/16-20 Thick Hex Nut
33795-S7	.01 .35-C	1/4-20 Hex Nut
33797-S7	.01 .65-C	5/16-18 Nut Reg Hex
33797-S16	.01 5.00-M	5/16-18 Nut Reg Hex
33798-S7	.01 .65-C	5/16-24 Hex Nut
33800-S7	.01 .90-C	3/8-24 Hex Nut
33806-S7-18	.05 4.50-C	5/8-18 Hex Nut
33816-S7	.04 3.25-C	5/16-20 Hex Nut
33817-S	.02 1.75	7/16-20 Slotted Nut (Thin)
33820-S7	.03 2.00-C	7/16-20 Castle Nut
33825-S7	.03 2.00-C	5/16-18 Hex Nut
33859-S	.10 1.50-XX	5/8-18 Castle Nut
33860-S7	.10 1.40-XX	5/8 x 18 Castle Nut
33879-S7	.01 .90-C	5/16 x 24 Hex Nut
33921-S7	.01 .60-C	1/4-28 Check Nut
33923-S7	.01 .65-C	5/16-24 Check Nut
34029-S7	.02 1.50-C	5/16 x 24 Hex Nut
34052-S7	.01 .20-C	No. 8-32 Hex Nut
34079-S7	.01 .30-C	No.10-32 Hex Nut
34141-S7	.01 .20-C	No. 10-32 Square Nut
34171-S7	.05 4.00-C	5/16-24 Blind Nut
34703-S7	.01 .15-C	No.10 Washer Flat
34706-S7	.01 .25-C	5/16 Washer Flat
34745-S7	.01 .20-C	1/4 Washer Flat
34746-S7	.01 .20-C	5/16 Washer Flat

Part No.	Price	Part Name
34802-S7	$ .01 .20-C	No. 10 Lock Washer
34803-S7	.01 .15-C	No.10 Lock Washer
34804-S	.01 .10-C	No. 12 Washer
34805-S7	.01 .20-C	1/4 Lock Washer
34806-S7	.01 .25-C	5/16 Lock Washer
34807-S2	.01 .30-C	3/8 Lock Washer
34807-S7	.01 .25-C	3/8 Lock Washer
34809-S7	.01 .60-C	1/2 Lock Washer
34810-S	.01 .65-C	9/16 Lock Washer
34822-S7	.01 .15-C	No. 8 Lock Washer
34823-S7	.01 .30-C	No. 10 Lock Washer
34842-S7	.01 .20-C	No. 8 Lock Washer
34906-S2	.01 .25-C	5/16 Lock Washer
60006-S	.01 .10-C	5/32 x 3/16 Rivet Flat Head
60037-S	.01 .15-C	3/16 x 7/16 Rivet Flat Head
60328-S	.01 .35-C	1/8 x 3/8 Rivet Round Head
60329-S	.01 .10-C	5/32 x 3/8 Rivet Round Head
60386-S	.01 .35-C	1/4 x 11/16 Rivet Round Head Solid
60414-S	.01 .30-C	1/4 x 13/16 Rivet Round Head Solid
60432-S	.01 .55-C	3/8 x 13/16 Rivet Round Head Solid
60442-S	.01 .30-C	1/4 x 7/8 Rivet Round Head Solid
60453-S	.01 .20-C	3/16 x 15/16 Rivet Round Head Solid
60518-S	.01 .35-C	1/4 x 1-1/4 Rivet Round Head Solid
60530-S	.01 .45-C	1/2 x 2 Rivet Round Head Solid
60894-S	.01 .10-C	3/16-5/16 Rivet Round Head Solid
61009-S	.01 .90-C	3/8 x 7/8 Rivet Round Head
63345-S7	.01 .60-C	3/16 x 7/16 Rivet Round Head
63825-S	.01 .65-C	1/8 x 3/8 Rivet
63968-S10	.01 .60-C	1/8 x 1/4 Rivet Brass Oval Head
72003-S	.50-M .10-C	1/16 x 1/2 Cotter Pin

STANDARD PARTS

Part No.	Price	Part Name
72005-S	$ .35-M	1/8 x 1/2 Cotter Pin
72008-S	.50-M	1/16 x 5/8 Cotter Pin
72009-S	.50-M	3/32 x 5/8 Cotter Pin
72010-S	.75-M	1/8 x 5/8 Cotter Pin
72017-S	.75-M	1/8 x 3/4 Cotter Pin
72026-S	.75-M	1/8 x 7/8 Cotter Pin
72035-S	.75-M	1/8 x 1 Cotter Pin
72036-S	1.50-M	5/32 x 1 Cotter Pin
72054-S	1.50-M	5/32 x 1-1/4 Cotter Pin
72062-S	1.00-M	1/8 x 1-3/8 Cotter Pin
72063-S7		5/32 x 1-3/8 Cotter Pin Use 72062-S
72080-S	1.50-M	1/8 x 1-5/8 Cotter Pin
73902-S	.07 1.20-XX	3/8 x 1 Clevis Pin
73912-S7	.04 3.40-C	3/8 x 1-1/16 Clevis Pin
73918-S7	.06	5/16 x 1-1/16 Clevis Pin
73936-S7	.06 1.00-XX	1/2 x 1-1/4 Clevis Pin
73956-S	.05 4.00-C	3/8 x 1-7/16 Clevis Pin
73984-S	.04 3.25-C	1/4 x 1-11/16 Clevis Pin
74034-S7	.05 4.00-C	5/16 x 1-11/16 Clevis Pin
74079-S7	.06 1.00-XX	1/2 x 2-5/8 Clevis Pin
74106-S	.01 .70-C	5/16 Expansion Plug
74121-S	.01 .70-C	1-1/4 Expansion Plug
74127-S	.01 .75-C	1-3/4 Expansion Plug
74142-S	.01 .50	1/2 x 1/8 Woodruff Key
74156-S	.04 3.60-C	1/4 x 1/8 Woodruff Key
74175-S	.01 .90-C	No. 6 Woodruff Key
74186-S	.04 3.90-C	1/4 x 1-1/8 Woodruff Key
88032-S7	.03 2.30-C	3/8-24-16 x 1-3/8 Stud
88113-S	.04 2.85-C	7/16-20-14 x 2-3/8 Stud
88146-S7	.02 1.80-C	5/16-24-18 x 2 Stud
88371-S	$ .02 1.20-C	5/16-24-18 x 1-1/4 Stud
88398-S	.04 3.00-C	7/16-20-14 Stud
88403-S	.04 2.85-C	5/16-14-20 Stud
88423-S	.04 3.10	7/16-20-14 x 1-7/8 Stud
88523-S	.03 2.50-C	7/16-20-14 x 3-1/8 Stud
92032-S19	.01 .25-C	No. 4 x 3/16 Drive Screw
97013-S	.15	3/8 x 2-1/8 Clevis Adjustable
350101-S7	.02 1.25-C	No. 10-32 x 1/2 Screw - Slotted
350164-S7	.02 1.40-C	No. 10-32 x .69 Screw
350400-S	.01 .80-C	Bolt
350433-S	.01 .80-C	5/16-18 x 1 Hex Screw
350439-S	.02 1.40-C	Bolt
350472-S7	.01 .70-C	5/16-24 x 5/8 Spec Carriage Bolt
350617-S7	.03 2.65-C	7/16 x 20 Bolt, Carriage, Spec
350635-S7	.10 9.00-C	7/16-20 Hex Bolt (Spec)
350645-S	.07 1.30-XX	7/16-20 x .84 Hex Head Bolt
350719-S7	.15 2.90-XX	3/8-18 Round Head Bolt
350830-S7	.02 1.35-C	No. 8-32 Nut
350835-S7	.01 .70-C	.18 Speed Nut
350860-S	.02 1.40-C	Brass No. 10-32 Hex Nut
350923-S7	.03 2.70-C	Wing, Nut - (Spec)
351025-S7	.02 1.85-C	7/16 x 20 Hex Head Nut
351040-S7	.03 2.15-C	7/16 x 20
351059-S7	.03 2.50-C	1/2 x 20 Hex Slotted Nut
351103-S22	.25	5/8 x 18 Acorn Nut
351118-S7	.05 4.00-C	11/16 Spec Hex Nut
351119-S7	.04 3.60-C	13/16-28 Spec Hex Nut
351129-S	.08 1.30-XX	3/4 x 16 Castle Nut
351253-S7	.01 .15-C	No. 10 Lock Washer

STANDARD PARTS

Part No.	Price	Part Name
351406-S	$ .01 .70-C	13/32 I.D. x 1-1/2 O.D. Spec Plain Washer
351428-S7	.01 .60-C	7/16-1/8 x 29/32
351436-S7	.02 1.30	7/16 Spec Lock Washer
351505-S7	.02 1.75-C	5/8 (5/32 x 1-1/4) Flat Washer
351544-S	.02 1.60-C	.815-.820 Spec Lock Washer
351926-S	.01 .40-C	5/32 x 3/16 Rivet (Flat Head C'sunk)
351963-S	.01 .35-C	3/16 x .94 Rivet
351978-S	.01 .55-C	7/16 Washer - Flat
352150-S	.04 3.45-C	7/16 x 1-1/2 Rivet - Round Head
352581-S7	.01 .60-C	5/16 x 1-1/2 Spec Pin
352592-S	.04 3.35-C	3/8 x 1-1/4 Clevis Pin
352625-S7	.20 2.80-XX	.750 x 2.9 Clevis Pin
353027-A2-S7	.12	1/8 Fitting Lubrication
353043-A1-S7	.03	Lubrication Fitting
353043-A2-S7	.03 2.15-C	1/4-28 Lubrication Fitting

Part No.	Price	Part Name
353064-S	$ .03 2.35-C	1/2 Pipe Plug
353075-S	.04 3.20-C	3/8 Ball (Steel)
355000-S	.05 4.50-C	No. 4-36 x 1/4 Screw (Machine)
355027-S7	.01 .40-C	No. 6-32 x .28 Flat Head Screw
355545-S	.02 1.40-C	3/8 x 16 x 1.25 Hex Bolt
355693-S7	.01 .40-C	7/16-14 x 1-3/8 Spec Hex Bolt
355755-S	.05 4.50-C	No. 14-24 Screw
356181-S	.07	No. 4 Lock Washer
356390-S	.45	.34 I.D. .56 O.D. Washer
356392-S		Stop Washer
356430-S	.02 1.25-C	Washer
356490-S		Spacer
356491-S		Washer (Thrust)
356803-S7		1/2-20 Hex Nut
357408-S		Pin
357409-S		Pin
358043-S7	.12	1/8 Pipe Plug
358081-S	.20	5/8 Ball

SYMBOLS

$ For service on all tractors.

9N-4012 and 9N-4013 used on tractors No. 1 to No. 1591.

EXCEPT

1528	1537	1546	1551	1556	1564	1567
1529	1544	1549	1554	1561	1566	1570
1531						

1604 equipped with cast iron housings.

9N-4012-A and 9N-4013-A used on tractors after No. 1591 to No. 6019.

EXCEPT 1604, 3813, 5408.

Also used on

6138	6338	6382	6457	6525	6572	6617
6202	6339	6386	6483	6547	6574	6632
6251	6346	6400	6515	6548	6590	6642
6260	6347	6447	6522	6561	6610	6646
6335	6367	6454				

9N-4012-B and 9N-4013-B used on all tractors after No. 6018.

EXCEPT

6138	6338	6382	6457	6525	6572	6617
6202	6339	6386	6483	6547	6574	6632
6251	6346	6400	6515	6548	6590	6642
6260	6347	6447	6522	6561	6610	6646
6335	6367					

NOTE

When servicing 4012, 4013, 4012-A and 4013-A ORDER

9N-4012-B Housing 9N-523-B Gasket
9N-4013-B Housing 9N-562-B Plate

Ⅰ 9N-523-A Gasket, 9N-562-A Plate } Used on all housings except 4012-B and 4013-B

⅃ 9N-523-B Gasket, 9N-562-B Plate } Used with 4012-B and 4013-B Housings.

● Used on all tractors.

NOTE: On tractors No. 1 to 2499 and those listed herein

2532	2566	2614	2643	2725	2780	2795
2535	2576	2630	2652	2754	2784	2800
2543	2589	2635	2654	2765	2785	3059
2548	2591	2636	2664	2777	2794	3150
2557	2596					

order the following:

1- 9N-9002-A	Gas Tank
1- 9N-9126	Adapter, tank to tank support
2- 20386-S2	Bolt
2- 350379-S7	Carriage Bolt
2- 33797-S2	Nut
2- 33798-S7	Nut
4- 34806-S	Lock Washer
4- 34706-S	Flat Washer

⊟ Used on first 4000 tractors.

Ø Used after first 4000 tractors to No. 12500.

EXCEPT

10732	11470	12157	12400	12490	12497
11148	11497	12168	12484	12492	12499
11400	12142				

Also used on

12501	12512	12532	12556	12611	12627
12503	12518	12535	12559	12615	12633
12504	12521	12537	12573	12617	12635
12506	12525	12538	12574	12619	12638
12508	12526	12542	12603	to	12644
12509	12527	12546	12610	12624	12853
12511	12530	12549		12626	

Used on all tractors from No. 12499 to No. 15002.

Also on tractor numbers

15198	15698	15751	15815	15851	16083
15202	15699	15755	15822	to	16155
15207	15710	to	15824	15859	16157
15280	15714	15758	15826	15861	16159
15290	to	15761	15827	15862	16165
15292	15717	15763	15829	15864	16169
15306	15723	15779	15831	15865	16179
15307	15724	15780	15841	15867	16187
15319	15728	15785	15842	to	16332
15397	15729	15801	15844	15869	16873
to	15736	15802	to	15871	to
15462	to	15804	15846	15879	16879
15464	15739	15807	15848	15885	16881
to	15746	15809	15849	16017	to
15622	15748	15810		16019	16950
15626					16953

⊗ Used on all tractors after No. 15001.

EXCEPT

15198	15698	15755	15815	15851	16083
15202	15699	to	15822	to	16155
15207	15710	15758	15824	15859	16157
15280	15714	15761	15826	15861	16159
15290	to	15763	15827	15862	16165
15292	15717	15779	15829	15864	16169
15306	15723	15780	15831	15865	16179
15307	15724	15785	15841	15867	16187
15319	15728	15801	15842	to	16332
15397	15729	15802	15844	15869	16873
to	15736	15804	to	15871	to
15462	to	15807	15846	15879	16879
15464	15739	15809	15848	15885	16881
to	15746	15810	15849	16017	to
15622	15748			16019	16950
15626	15751				16953

★ Used on all tractors after No. 5677 EXCEPT those listed below.

To service air cleaners on tractors before No. 5678 and numbers listed herein, order 9N-9600-C also 9N-18215-C, Pipe.

The oil cup and clamp are interchangeable with 9N-9658-C1, oil cup, and 9N-9628-C1, clamp assembly.

Tractors to No. 5678 and numbers

5711	6226	6396	6507	6555	7304	7429
6162	6240	6407	to	to	7311	7430
6163	6249	6440	6520	6565	7313	7434
6166	6257	6446	6523	6818	7390	7438
6188	6261	6455	6525	6991	7392	7439
6193	6268	6458	6530	7154	7412	7440
6202	6271	6482	6531	7182	7415	7459
6204	6275	6487	6533	7259	7418	7460
6207	6337	6490	6537	7277	7419	7468
6211	6338	6491	6539	7290	7423	7471
6221	6339	6500	6541	7291	7425	7524
to	6381		to	7293	7426	7571
6224	6386		6552	7301		

SYMBOLS

■ Used on all tractors to No. 12500.

EXCEPT

10732	11470	12457	12400	12490	12497
11148	11497	12468	12484	12492	12499
11400	12142				

Also used on tractors

12501	12512	12532	12556	12611	12627
12503	12518	12535	12559	12615	12633
12504	12521	12537	12573	12617	12635
12506	12525	12538	12574	12619	12638
12508	12526	12542	12603	to	12644
12509	12527	12546	12610	12624	12853
12511	12530	12549		12626	

▲ Used on all tractors after No. 12499.

EXCEPT

12501	12512	12532	12556	12611	12627
12503	12518	12535	12559	12615	12633
12504	12521	12537	12573	12617	12635
12506	12525	12538	12574	12619	12638
12508	12526	12542	12603	to	12644
12509	12527	12546	12610	12624	12853
12511	12530	12549		12626	

Also used on tractors

10732	11470	12157	12400	12490	12497
11148	11497	12168	12484	12492	12499
11400	12142				

‡ Used on all tractors thru tractor No. 13883 EXCEPT casting hoods and the following tractor numbers.

10213	12585	12699	12807	13088	13186	13364	13512	13701
10732	to	12701	12809	13089	13188	to	13519	to
11148	12587	12703	to	13090	13190	13370	13520	13708
11400	12590	to	12811	13092	13191	13372	to	13710
11470	to	12707	12815	13094	13193	13373	13522	13711
11490	12593	12708	to	13096	to	13375	13527	13713
12142	12595	12711	12817	13098	13218	to	13531	to
12157	12598	12712	12819	13099	13220	13386	13534	13715
12168	to	12714	12820	13102	to	13388	13535	13717
12360	12600	to	12824	to	13224	to	13546	13718
12392	12602	12716	to	13107	13226	13391	13548	13720
12484	to	12718	12828	13109	to	13393	to	13722
12492	12605	to	12831	13111	13229	to	13550	13724
12497	12608	12722	to	to	13233	13397	13554	to
12499	12609	12724	12833	13113	to	13399	13555	13741
12500	12613	12726	12839	13115	13249	13400	13560	13743
12502	12614	to	12843	13117	13251	to	to	to
12505	12616	12728	to	13119	to	13403	13566	13753
12510	12618	12730	12848	13121	13260	13405	13569	13755
12517	12625	12731	12851	to	13262	13406	13570	to
12519	12628	12733	12852	13125	to	13410	13574	13761
12520	12630	12735	12854	13129	13273	13412	to	13764
12522	to	12737	12923	to	13275	13414	13578	13766
12523	12632	to	12945	13131	to	13416	13580	13768
12528	12634	12739	12948	13133	13296	13417	to	13769
12531	to	12743	12967	13134	13298	13419	13596	13770
12534	12636	to	to	13136	13299	13420	13598	to
12536	12637	12757	12970	to	13300	to	13600	13772
12539	12639	12759	12972	13138	13301	13423	13602	13774
12540	to	to	to	13140	13303	13425	to	13776
12544	12643	12761	12979	to	to	to	13620	13777
12545	12645	12763	12985	13142	13310	13430	13622	to
12552	to	12765	13004	13144	13312	13432	to	13779
12553	12653	12767	13038	13146	to	to	13624	13781
12554	12656	to	13045	13147	13318	13463	13626	to
12555	12658	12769	13047	13149	13322	13465	to	13785
12557	to	12771	13048	to	13323	13466	13629	13787
12560	12665	12773	13050	13152	13325	13469	13631	to
12562	12667	to	13053	13154	to	13470	to	13789
12563	12668	12779	13054	13156	13332	13472	13639	13791
12565	12671	12781	13061	13157	13334	to	13641	13793
to	12673	12784	13062	13159	to	13477	13643	13796
12572	to	12786	13063	13161	13338	13482	to	to
12575	12675	12789	13064	to	13340	13483	13669	13803
12576	12677	to	13066	13170	13342	13487	13671	13805
12579	12680	12793	13069	13172	to	13489	to	13806
12581	12682	12795	13071	to	13347	13490	13686	13809
12584	12686	12796	13072	13174	13349	13494	13688	to
	12687	12798	13077	13176	to	13495	to	13826
	12692	12799	13084	to	13356	13506	13691	13828
	12693	12800	to	13179	13358	13508	13693	to
	12695	12802	13087	13181	13359	13509	to	13837
	12698	to		13184	13361		13697	13839
		12804			13362			to
								13883

@ Used on all tractors beginning with No. 13884 and on the tractor numbers appearing above.

WARRANTY

The Ford Motor Company warrants all such parts of new Ford tractors, EXCEPT TIRES, for a period of ninety (90) days from the date of original delivery to the purchaser of each new Ford tractor, as shall, under normal use and service, appear to it to have been defective in workmanship or material. This warranty shall be limited to shipment to the purchaser without charge, except for transportation, of the part or parts intended to replace those acknowledged by the Ford Motor Company to be defective. The Ford Motor Company cannot, however, and does not accept any responsibility in connection with any of its tractors when they have been altered outside of its own factories or branch plants. If the purchaser shall use or allow to be used in the tractor, parts not made or supplied by the Ford Motor Company, then this warranty shall become void. The Ford Motor Company does not undertake responsibility to any purchaser of its products for any undertaking, representation or warranty made by anyone selling its products beyond those herein expressed.

The Ford Motor Company reserves the right to make changes in design and changes or improvements upon its product without imposing any obligation upon itself to install the same upon its products theretofore manufactured.

TIRE WARRANTY

Every tractor tire manufactured by the Ford Motor Company, bearing its name and serial number and used in farm service and agriculture, is warranted by it to be free from defects in workmanship and material without limit as to time or mileage and to give satisfactory service under normal operating conditions. If the Ford Motor Company's examination shows that any tire has failed under the terms of this warranty, it will at its option either repair the tire or make an allowance on the purchase of a new tire.

FORD MOTOR COMPANY

Ford Tractor

FERGUSON SYSTEM

WHEEL-LESS IMPLEMENTS

© Ford Motor Co.

"—Have it in the bin,

when the Farmer comes in."